SMITH CORONA

SERVICE BULLETIN

TO: Technical Service & Training
Regional Service Managers
Service Locations
Canada & International
Electronic Servicing Dealers

NO: 2

PRODUCT:
5A SERIES VERSION 2
ELECTRONIC TYPEWRITERS

SUBJECT: **SD 645 (5AHA) Typewriters**

DATE: September 5, 1989

The unique Deck for the SD 645 (5AHA) is listed below. For all other parts, refer to 5A Series Version 2 Parts Manual, Form 3-0771. The color combination for the SD 645 is Silver Fog/Accent Gray; machine type is 5A Series with an LCD.

Part Number	**Description**
773778	Deck, Silver Fog

Smith Corona reserves the right to discontinue parts at any time and/or to furnish substitutes.

Printed in U.S.A.

SMITH CORONA

SERVICE BULLET

TO: Technical Service & Training
Regional Service Managers
Service Locations
Canada and International
5A Series Electronic Dealers

NO: 12

PRODUCT:

5A SERIES
ELECTRONIC TYPEWRITERS

SUBJECT: ANTI-STROBING SOFTWARE AND NEW PC BOARD FOR 5A SERIES TYPEWRITERS

DATE: February 16, 1987

New software has been implemented to reduce occurrence of "Strobing" (hammer strikes between petals of print element). To maximize effectiveness of this software, the Element Gear Spring was changed to increase tension between scissors gears. The part number for the new Spring is 771260.

INTERCHANGEABILITY

Anti-strobing software, which is present on PC Board 770414, should be used on machines equipped with the new Element Gear Spring (P/N 771260).

Previous software, which is present on PC Board 770400, should be used on machines equipped with previous design Element Gear Spring (P/N 745060).

Either PC Board can be used on any machine, provided the Element Gear Spring is changed to match the software as indicated above.

PC BOARD IDENTIFICATION AND SELECTION

Refer to the part number on Microprocessor U1 of a machine's original PC Board to determine which replacement PC Board is correct for that machine.

MICROPROCESSOR (U1) PART NUMBER	REPLACEMENT PC BOARD PART NUMBER
750436, 750437, 750447, 750448, 750455 (PREVIOUS SOFTWARE)	770400
750497, 750498, 750536 OR HIGHER (ANTI-STROBING SOFTWARE)	770414

STROBING CHECK: In actuality, most machines will work well with either PC Board, regardless of which Element Gear Spring (745060 or 771260) is in place. If in doubt about compatibility of software and Gear Spring, perform this check when machine is cold: Type a series of R's and O',s then a series of M's and I's. If strobing occurs, the software and Element Gear Spring must be matched as indicated above.

NOTE 1: Do not use the machine's self test to check strobing.

NOTE 2: All 5A Series machines should have Element Pusher Spring (P/N 770924), which is identified by a red dye on the Spring, to help eliminate strobing (see 5A Series Service Bulletin #3).

For prices refer to the current Smith Corona Parts Price List.

Smith Corona reserves the right to discontinue parts at any time and/or to furnish substitutes.

SMITH CORONA

SERVICE BULLET

TO: Technical Service & Training
Regional Service Managers
Service Locations
5A Series Electronic Dealers
Canada & International

NO: 13

PRODUCT: 5A SERIES ELECTRONIC TYPEWRITERS

SUBJECT: REDESIGNED CORRECTION BAIL ASSEMBLY (771058)

DATE: February 16, 1987

Redesigned Correction Bail Assembly (771058) is shown in the illustration below.

The new bail has a Bumper (749494) on the downstop arm instead of a Bumper (770271) on the Carrier downstop. This prevents the Correction Bail from sticking, which causes poor correction of the first and second characters.

NEW

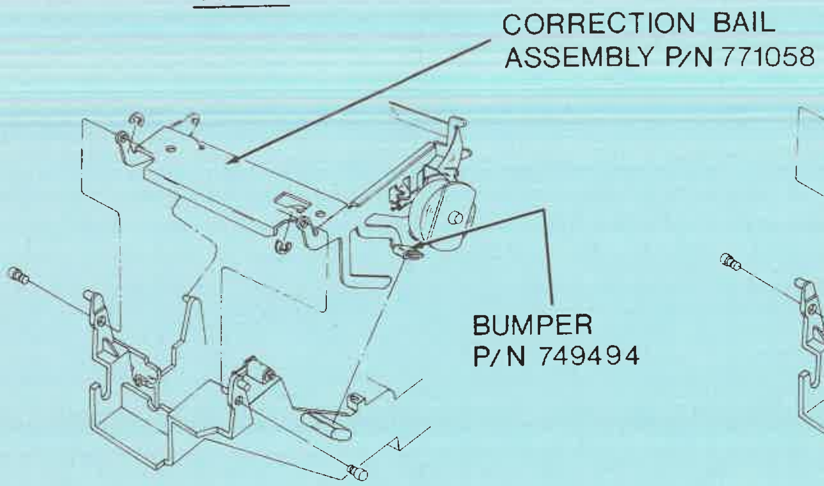

OLD

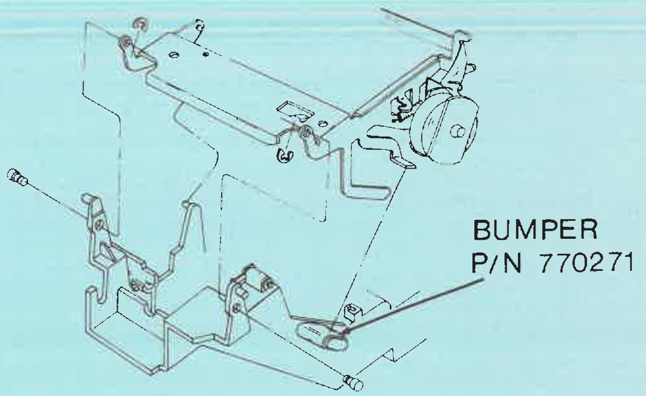

PART NUMBER	DESCRIPTION	QTY
749494	BUMPER	1
771058	CORRECTION BAIL ASSY.	1

The new Bail is interchangeable with the previous design, providing the old Correction Bumper (770271) is removed from the Carrier downstop. The new Bumper (749494) must be installed on the new Bail.

Previous design Correction Bail Assembly (770190) and Bumper (770271) are no longer be available from parts ordering sources.

For prices refer to the current Smith Corona Parts Price List.

Smith Corona reserves the right to discontinue parts and/or furnish substitutes.

Printed in U.S.A.

SMITH CORONA

SERVICE BULLET

TO: Technical Service & Training
Regional Service Managers
Service Locations
5A Series Electronic Dealers
Canada & International

NO: 10

PRODUCT: 5A SERIES ELECTRONIC TYPEWRITERS

SUBJECT: CORRECTION LIFT SPRING (428090)

DATE: November 7, 1986

Placement of the Correction Lift Spring in the hole of the Ribbon Solenoid Bracket is critical for consistent lift of the Correction Bail.

When properly positioned, the Correction Lift Spring provides both forward and side pressure to the Correction Lift Bellcrank. This pressure allows proper Correction Ribbon Mechanism engagement. Refer to the illustrations below for correct and incorrect Spring placements.

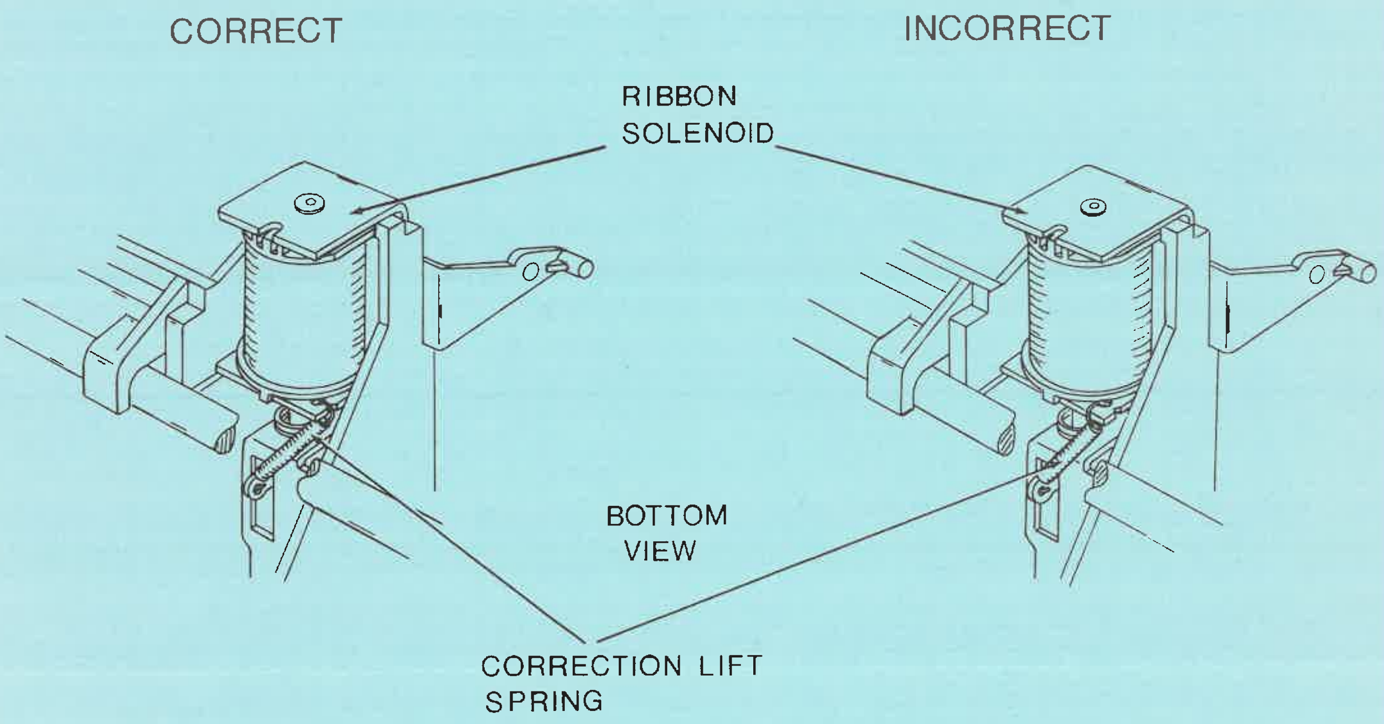

Current production parts incorporate a "V" shaped notch in the Ribbon Solenoid Bracket to keep the Spring in place.

For prices refer to the current Smith Corona Parts Price List.

Smith Corona reserves the right to discontinue parts and/or furnish substitutes.

Printed in U.S.A.

SMITH CORONA

SERVICE BULLET

TO: Technical Service & Training
Regional Service Managers
Service Locations
5A Series Electronic Dealers
Canada & International

NO: 7A

PRODUCT: 5A SERIES ELECTRONIC TYPEWRITERS

SUBJECT: SERVICE TRAINING VIDEOTAPE

DATE: Reissued March 24, 1987

The XL 1000 Service Training Videotape is now available from National Service Stores. This program covers the XL 1000 and other 5A Series Electronic Typewriters such as the SL 80 and private brand models.

This is a professionally done, interesting 100 minute program that covers machine features, specifications, lubrication and cleaning, and use of the Service Manual. It explains and demonstrates all machine adjustments and removals. And it provides a good briefing on troubleshooting, and an explanation of how the machine works that will help the technician diagnose a problem quickly.

Technicians can train themselves by viewing the tape, following along in the Service Manual, and stopping the tape frequently to perform the procedures they have just seen.

As the primary means of training on 5A machines, this tape is recommended to all servicing Dealers. It will minimize the need for more costly, day long programs in the field, and it will provide a lasting training reference that can be viewed whenever necessary.

Included with the tape is a program outline that includes space for recording counter readings from your Videotape player. Also included is information on how to receive a training certificate through this program.

The XL 1000 Videotape can be ordered from National Service Stores as follows:

PART NUMBER	TYPE	PRICE
250367	VHS	$49 NET
250368	BETA	$49 NET

Printed in U.S.A.

SMITH CORONA

SERVICE BULLETI

TO: Technical Service & Training
Regional Service Managers
Service Locations
Canada and International
5A Series Electronic Dealers

NO: 14

PRODUCT: 5A SERIES ELECTRONIC TYPEWRITERS

SUBJECT: 5A SERIES PC BOARD COMPONENTS

DATE: March 16, 1987

This Bulletin lists and illustrates the Electronic Components necessary for the maintenance of 5A Series PC Boards.

A Component Number is used for each component on the PC Board Component Diagram. Thi number is listed alphabetically and numerically in the parts listing beneath the illustration, and refers directly to the part number.

When a component has a variation in usage, the Component Number appears more than onc in the Component column. Use extreme care in selecting parts in these areas.

If the part number is known, the page on which it is listed can be readily found by reference to the numerical listing at the end of the Bulletin.

ORDERING INSTRUCTIONS: State the correct part number on all parts orders. State additional information if asked for. It is not necessary to state the part name unless the number is not known. Do not order by Component Numbers.

NOTICE

Smith Corona encourages PC Board repair by qualified technicians. If, however, after trying to repair a PC Board, the Board still does not work properly, return the Board to Smith Corona National Service Stores for warranty or repair exchange.

IMPORTANT: SMITH CORONA DOES NOT REPLACE OR EXCHANGE DAMAGED PC BOARDS (IN OR OUT OF WARRANTY).

Boards will be returned as irrepairable and no credits or exchanges issued when:

- There are missing components
- There are damaged or lifted traces
- There are solder burns
- There is any other Board damage which makes the Board irrepairable

CONTENTS

SUBJECT	PAGE NUMBER
CONTROL PC BOARD (P/N 770400)	2-3
CONTROL PC BOARD (P/N 770414)	4-5

Smith Corona reserves the right to discontinue parts at any time and/or to furnish substitutes.

Printed in U.S.A.

COMPONENT DIAGRAM
CONTROL PC BOARD

MODELS 5AEA, 5ACA, 5AKA
5AWA, 5APA   P/N 770400 (Version 1)

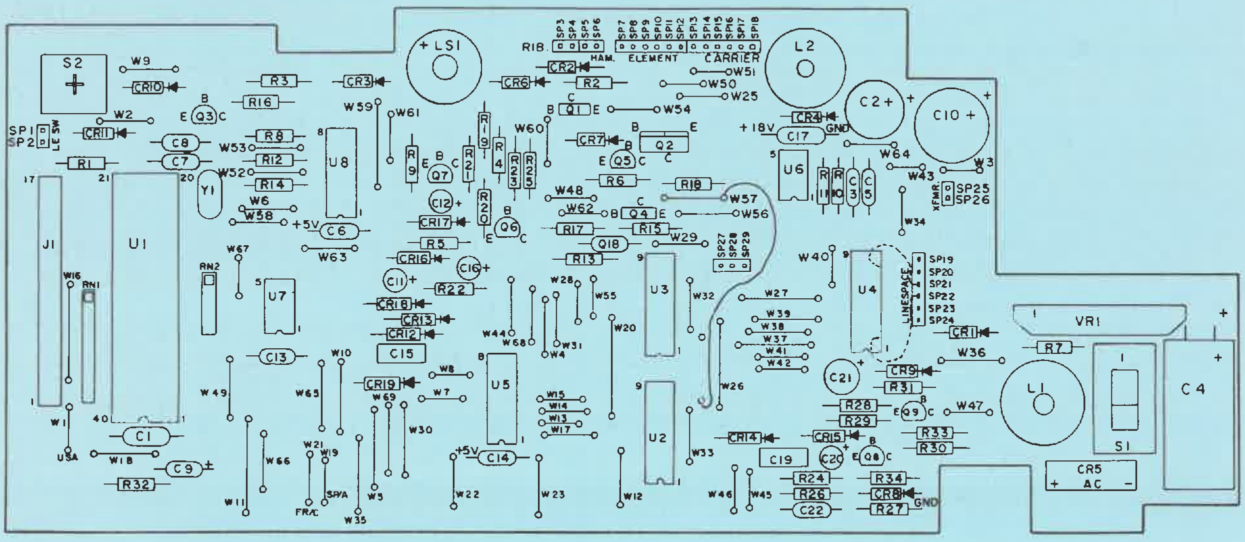

COMPONENT	PART NUMBER	DESCRIPTION
C1, C17	700349	CAPACITOR, .1 uF/50V, AXIAL, CERAMIC
C2	770204	CAPACITOR, 470 uF/6.3V, ELEC., ALUMINUM
C3	700360	CAPACITOR, 20 pF/100V, AXIAL, CERAMIC
C4	770215	CAPACITOR, 2200 uF/35V, ELEC., ALUMINUM
C5	700356	CAPACITOR, 2000 pF/50V, AXIAL, CERAMIC
C6, C13, C14, C22	700341	CAPACITOR, .01 uF/50V, AXIAL, CERAMIC
C7, C8	700365	CAPACITOR, 30 pF/100V, AXIAL, CERAMIC
C9	700390	CAPACITOR, 10 uF/10V, AXIAL, TANTALUM
C10	730001	CAPACITOR, 2200 uF/25V, ELEC., ALUMINUM
C11	770206	CAPACITOR, 1 uF/6.3V, ELEC., ALUMINUM
C12, C16	770207	CAPACITOR, 10 uF/16V, ELEC., ALUMINUM
C15, C19	730017	CAPACITOR, 1 uF/100V, RAD., ELEC.
C18	700398	CAPACITOR, 2.2 uF/25V, AXIAL, TANTALUM
C20	730014	CAPACITOR, 47 uF/16V, RAD., ELEC.
C21	770208	CAPACITOR, 22 uF/16V, RAD., ELEC.
CR1, CR7	700521	DIODE, 50V, SILICON, 1N4001
CR2, CR6	722058	DIODE, 1 AMP., FAST RECOVERY, 1N4933
CR3, CR8-CR19	709100	DIODE, SILICON, SWITCHING, 1N914
CR4	760421	DIODE, 1 AMP, SCHOTTKY, 1N5819
CR5	770853	4 AMP, BRIDGE RECTIFIER (5/32" LEAD SPACING)
CR5	770801	4 AMP, BRIDGE RECTIFIER (7/32" LEAD SPACING)
J1	770150	CONNECTOR, .100, 17 POSITION, FLEX CABLE
L1	770310	INDUCTOR, VERTICAL MOUNT, 270 uH, 6 AMP
L2	770309	INDUCTOR, VERTICAL MOUNT, 330 uH, 1 AMP
LS1 (BEEPER)	728783	AUDIO TRANSDUCER, 12V
Q1	743086	TRANSISTOR, NPN, DARLINGTON, TO-126, 2N6039
Q2	770302	TRANSISTOR, NPN, DARLINGTON, TO-220, 2N6045
Q3, Q5-Q8	702518	TRANSISTOR, NPN, TO-92, 2N3904
Q4	740344	TRANSISTOR, PNP, DARLINGTON, TO-126, 2N6035
Q9	703714	TRANSISTOR, PNP, TO-92, 2N3906
R1	701252	RESISTOR, 220 OHM, 1/4 W, 5%
R2	748225	RESISTOR, 11 OHM, 1/4 W, 5%
R3	746938	RESISTOR, 390 OHM, 1/4 W, 5%
R4, R19	701263	RESISTOR, 100 K OHM, 1/4 W, 5%
R5, R20, R27, R29	701275	RESISTOR, 22 K OHM, 1/4 W, 5%
R6, R22-R24	701268	RESISTOR, 10 K OHM, 1/4 W, 5%

COMPONENT DIAGRAM
CONTROL PC BOARD
MODELS 5AEA, 5ACA, 5AKA
5AWA, 5APA   P/N 770400 (Version 1)

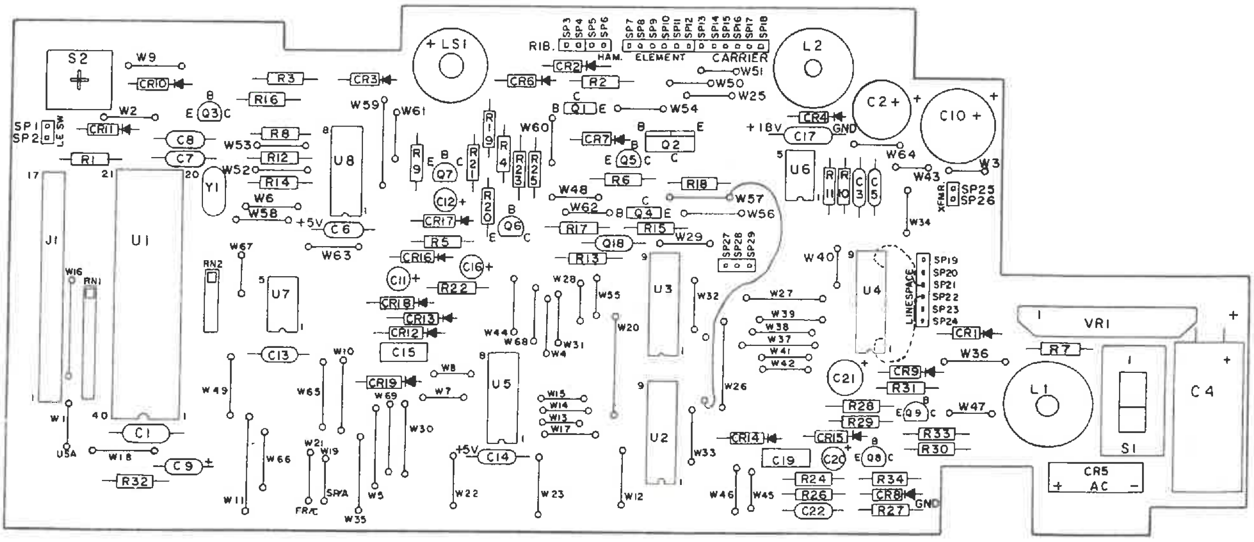

COMPONENT	PART NUMBER	DESCRIPTION
R7, R17, R18	701280	RESISTOR, 1.8 K OHM, 1/4 W, 5%
R8, R12	749348	RESISTOR, 180 OHM, 1/4 W, 5%
R9, R21	701287	RESISTOR, 39 K OHM, 1/4 W, 5%
R10	748281	RESISTOR, 40.2 K OHM, 1/4 W, 1%, METAL FILM
R11	748279	RESISTOR, 10 K OHM, 1/4 W, 1%, METAL FILM
R13, R14, R16	701272	RESISTOR, 3.9 K OHM, 1/4 W, 5%
R15	748221	RESISTOR, 27 K OHM, 1/4 W, 5%
R25	748227	RESISTOR, 220 K OHM, 1/4 W, 5%
R26	701297	RESISTOR, 5.6 K OHM, 1/4 W, 5%
R28	748226	RESISTOR, 82 K OHM, 1/4 W, 5%
R30	701299	RESISTOR, 8.2 K OHM, 1/4 W, 5%
R31, R34	701254	RESISTOR, 1 K OHM, 1/4 W, 5%
R32	727474	RESISTOR, 4.3 K OHM, 1/4 W, 5%
R33	701266	RESISTOR, 100 OHM, 1/4 W, 5%
RN1	723343	RESISTOR NETWORK, SIP, 8 RESISTORS, 10 K OHM
RN2	723345	RESISTOR NETWORK, SIP, 4 RESISTORS, 3.9 K OHM
SP1-SP29	748856	STAKE PIN, .025 SQUARE
S1	770822	SLIDE SWITCH, SPDT
S2	770851	LID SWITCH
U1	750447	IC, MICROPROCESSOR, MASKED, 8052 (FOR VERSION 1 PCB)
U2, U3, U4	770307	IC, QUAD DRIVER, L6221B
U5	705236	IC, TTL, HEX INVERTER, 74LS04
U6	770300	IC, SWITCHING REGULATOR, LM3578CT
U7	770830	IC, SERIAL RAM, CMOS, 128 WORD X 8 BIT
U8	724700	IC, OPEN COLLECTOR, HEX BUFFER, 7406
VR1	760047	REGULATOR, 12V, HYBRID, STR 2012
Y1	770304	CRYSTAL, QUARTZ, 12 mHZ
W2-W18, W20, W22-W29, W31-W69	705294	JUMPER WIRE

COMPONENT DIAGRAM
CONTROL PC BOARD

MODELS 5AEA, 5ACA, 5AKA, 5AWA, 5APA

P/N 770400 (Version 2)
770414

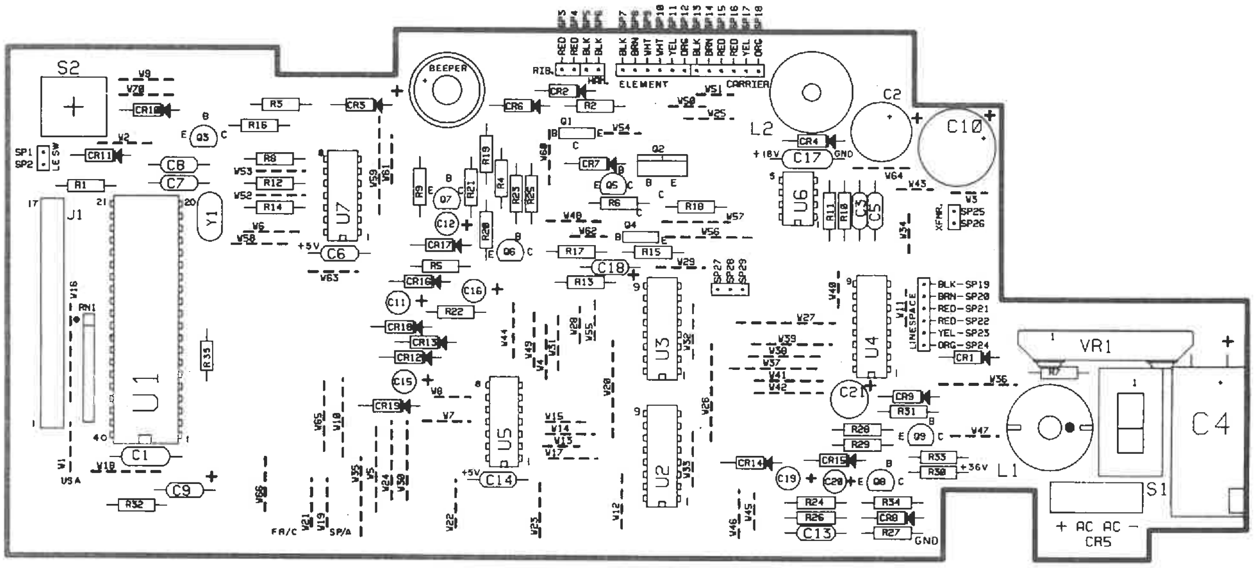

COMPONENT	PART NUMBER	DESCRIPTION
C1, C17	700349	CAPACITOR, .1 uF/50V, AXIAL, CERAMIC
C2	770204	CAPACITOR, 470 uF/6.3V, ELEC., ALUMINUM
C3	700360	CAPACITOR, 20 pF/100V, AXIAL, CERAMIC
C4	770215	CAPACITOR, 2200 uF/35V, ELEC., ALUMINUM
C5	700356	CAPACITOR, 2000 pF/50V, AXIAL, CERAMIC
C6, C13, C14, C22	700341	CAPACITOR, .01 uF/50V, AXIAL, CERAMIC
C7, C8	700365	CAPACITOR, 30 pF/100V, AXIAL, CERAMIC
C9	700390	CAPACITOR, 10 uF/10V, AXIAL, TANTALUM
C10	730001	CAPACITOR, 2200 uF/25V, ELEC., ALUMINUM
C11	770206	CAPACITOR, 1 uF/6.3V, ELEC., ALUMINUM
C12, C16	770207	CAPACITOR, 10 uF/16V, ELEC., ALUMINUM
C15, C19	730017	CAPACITOR, 1 uF/100V, RAD., ELEC.
C18	700398	CAPACITOR, 2.2 uF/25V, AXIAL, TANTALUM
C20	730014	CAPACITOR, 47 uF/16V, RAD., ELEC.
C21	770208	CAPACITOR, 22 uF/16V, RAD., ELEC.
CR1, CR7	700521	DIODE, 50V, SILICON, 1N4001
CR2, CR6	722058	DIODE, 1 AMP., FAST RECOVERY, 1N4933
CR3, CR8-CR19	709100	DIODE, SILICON, SWITCHING, 1N914
CR4	760421	DIODE, 1 AMP, SCHOTTKY, 1N5819
CR5	770801	4 AMP, BRIDGE RECTIFIER (7/32" LEAD SPACING)
J1	770150	CONNECTOR, .100, 17 POSITION, FLEX CABLE
L1	770310	INDUCTOR, VERTICAL MOUNT, 270 uH, 6 AMP
L2	770309	INDUCTOR, VERTICAL MOUNT, 330 uH, 1 AMP
LS1 (BEEPER)	728783	AUDIO TRANSDUCER, 12V
Q1	743086	TRANSISTOR, NPN, DARLINGTON, TO-126, 2N6039
Q2	770302	TRANSISTOR, NPN, DARLINGTON, TO-220, 2N6045
Q3, Q5-Q8	702518	TRANSISTOR, NPN, TO-92, 2N3904
Q4	740344	TRANSISTOR, PNP, DARLINGTON, TO-126, 2N6035
Q9	703714	TRANSISTOR, PNP, TO-92, 2N3906
R1	701252	RESISTOR, 220 OHM, 1/4 W, 5%
R2	771149	RESISTOR, 11 OHM, 1/4 W, FLYBACK
R3	746938	RESISTOR, 390 OHM, 1/4 W, 5%
R4, R19	701263	RESISTOR, 100 K OHM, 1/4 W, 5%

COMPONENT DIAGRAM

CONTROL PC BOARD

MODELS 5AEA, 5ACA, 5AKA, 5AWA, 5APA

P/N 770400 (Version 2)

770414

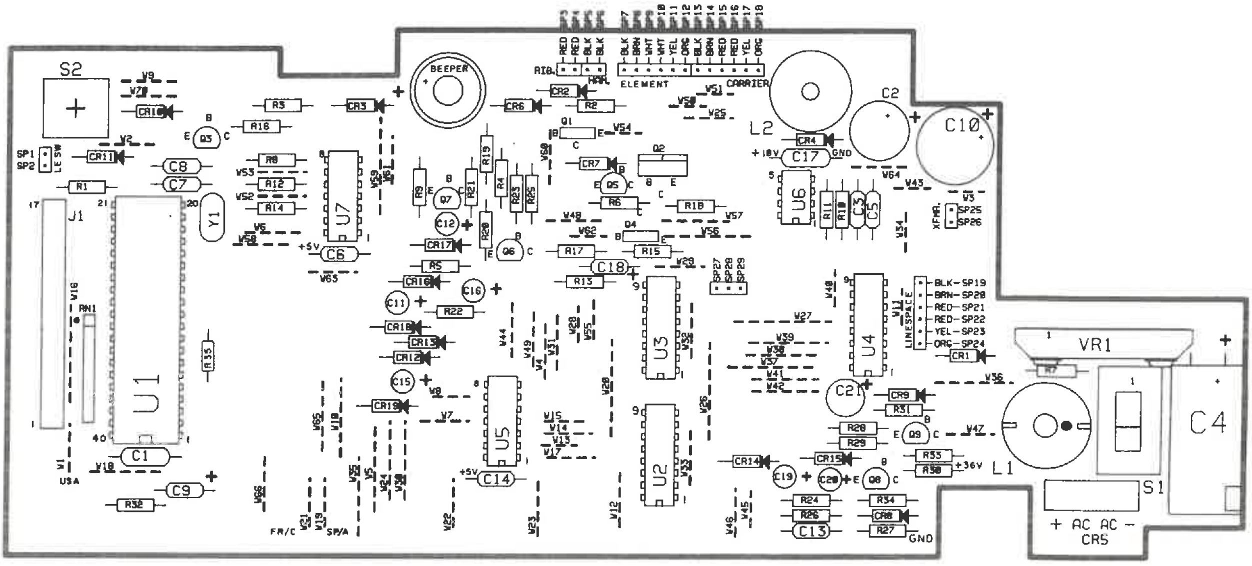

COMPONENT	PART NUMBER	DESCRIPTION
R5, R20, R27, R29	701275	RESISTOR, 22 K OHM, 1/4 W, 5%
R6, R22, R24	701268	RESISTOR, 10 K OHM, 1/4 W, 5%
R7, R17, R18	701280	RESISTOR, 1.8 K OHM, 1/4 W, 5%
R8, R12	749348	RESISTOR, 180 OHM, 1/4 W, 5%
R9, R21	701287	RESISTOR, 39 K OHM, 1/4 W, 5%
R10	748281	RESISTOR, 40.2 K OHM, 1/4 W, 1%, METAL FILM
R11	748279	RESISTOR, 10 K OHM, 1/4 W, 1%, METAL FILM
R13, R14, R16	701272	RESISTOR, 3.9 K OHM, 1/4 W, 5%
R15, R23	748221	RESISTOR, 27 K OHM, 1/4 W, 5%
R25	748227	RESISTOR, 220 K OHM, 1/4 W, 5%
R26	701297	RESISTOR, 5.6 K OHM, 1/4 W, 5%
R28	748226	RESISTOR, 82 K OHM, 1/4 W, 5%
R30	701299	RESISTOR, 8.2 K OHM, 1/4 W, 5%
R31, R34	701254	RESISTOR, 1 K OHM, 1/4 W, 5%
R32	727474	RESISTOR, 4.3 K OHM, 1/4 W, 5%
R33	701266	RESISTOR, 100 OHM, 1/4 W, 5%
R35	771000	RESISTOR, 3.9 K OHM, 1/8 W, 5%
RN1	723343	RESISTOR NETWORK, SIP, 8 RESISTORS, 10 K OHM
SP1-SP29	748856	STAKE PIN, .025 SQUARE
S1	770822	SLIDE SWITCH, SPDT
S2	770851	LID SWITCH
U1	750455	IC, MICROPROCESSOR, MASKED, 8052 (FOR VERSION 2 PCB)
U1	750498	IC, MICROPROCESSOR, MASKED, 8052, ANTI-STROBING SOFTWARE (FOR PCB P/N 770414)
U2, U3, U4	770307	IC, QUAD DRIVER, L6221B
U5	705236	IC, TTL, HEX INVERTER, 74LS04
U6	770300	IC, SWITCHING REGULATOR, LM3578CT
U7	724700	IC, OPEN COLLECTOR, HEX BUFFER, 7406
VR1	760047	REGULATOR, 12V, HYBRID, STR 2012
Y1	770304	CRYSTAL, QUARTZ, 12 mHZ
W2-W18, W20, W22-W69	705294	JUMPER WIRE

PART NUMBER	PAGE
700341	2
700341	4
700349	2
700349	4
700356	2
700356	4
700360	2
700360	4
700365	2
700365	4
700390	2
700390	4
700398	2
700398	4
700521	2
700521	4
701252	2
701252	4
701254	3
701254	5
701263	2
701263	4
701266	3
701266	5
701268	2
701268	5
701272	3
701272	5
701275	2
701275	5
701280	3
701280	5
701287	3
701287	5
701297	3
701297	5
701299	3
701299	5
702518	2
702518	4
703714	2
703714	4
705236	3
705236	5
705294	3
705294	5
709100	2
709100	4
722058	2
722058	4
723343	3
723343	5
723345	3
724700	3
724700	5
727474	3
727474	5
728783	2
728783	4
730001	2
730001	4
730014	2
730014	4
730017	2
730017	4
740344	2
740344	4
743086	2
743086	4
746938	2
746938	4
748221	3
748221	5
748225	2
748226	3
748226	5
748227	3
748227	5
748279	3
748279	5
748281	3
748281	5
748856	3
748856	5
749348	3
749348	5
750447	3
750455	5
750498	5
760047	3
760047	5
760421	2
760421	4
770150	2
770150	4
770204	2
770204	4
770206	2
770206	4
770207	2
770207	4
770208	2
770208	4
770215	2
770215	4
770300	3
770300	5
770302	2
770302	4
770304	3
770304	5
770307	3
770307	5
770309	2
770309	4
770310	2
770310	4
770801	2
770801	4
770822	3
770822	5
770830	3
770851	3
770851	5
770853	2
771000	5
771149	4

SMITH CORONA

SERVICE BULLET

TO: Technical Service & Training
Regional Service Managers
Service Locations
Canada and International
5A Series Electronic Dealers

SUBJECT: 5A SERIES
CASING BASES

NO: 15

PRODUCT:

5A SERIES
ELECTRONIC TYPEWRITERS

DATE: March 24, 1987

When replacing a Casing Base on a 5A Series typewriter, make sure the hot stamped Country of Manufacture graphics of the replacement base matches the original base. Order the appropriate Casing Base as follows:

CASING BASE PART NUMBER	COUNTRY OF MANUFACTURE	COLOR	MODEL PREFIX	MODEL NAME
770140	USA	LT. ACADEMY	5ACA 5AKA	SL 80 DEVILLE 80
770141	USA	DOVER WHITE	5AEA 5AWA 5APA	XL 1000 MARK V CXL-4000
770142	SINGAPORE	LT. ACADEMY	5ACA 5AKA	SL 80 DEVILLE 80
770143	USA	DOVER WHITE	5AEA (UK)	XL 1000
770144	SINGAPORE	DOVER WHITE	5AEA 5AWA 5APA	XL 1000 MARK V CXL 4000
770145	SINGAPORE	DOVER WHITE	5AEA (UK)	XL 1000

For prices refer to the current Smith Corona Parts Price Lists and Supplements.

Smith Corona reserves the right to discontinue parts at any time and/or to furnish substitutes.

Printed in U.S.A.

SMITH CORONA

PUBLICATION BULLET

TO: Technical Service & Training
Regional Service Managers
Service Locations
Canada & International
Electronic Servicing Dealers

PUBLICATION:
XL-2000 (5AEB)
SL-105 (5ACB)
PARTS MANUAL, FORM 3-0735

SUBJECT: REVISED PAGES FOR PARTS MANUAL

DATE: August 24, 1987

Attached are revised pages for the Smith Corona XL-2000 and SL-105 Parts Manual, Form 3-0735. Insert these pages in the Manual according to the Placement Instructions below.

PLACEMENT INSTRUCTIONS

REMOVE AND DISCARD		INSERT		
PAGE NO.	DATE	PAGE NO.	REVISION DATE	REASON FOR CHANGE
5	ORIGINAL	5	8/87	CORRECTED PART NUMBERS

NOTE: An arrow [⟶] indicates what has changed.

KEEP THIS SHEET IN THE SERVICE MANUAL BINDER

3-0735A

Printed in U.S.A.

KEYBUTTON
REFERENCE
CHART

KEYBOARD CODES:
US -- UNITED STATES 1063 KEYBOARD
EC -- ENGLISH CANADIAN 1063 KEYBOARD
FC -- FRENCH CANADIAN 1132 KEYBOARD

COLOR CODE:
ALL PLATINUM

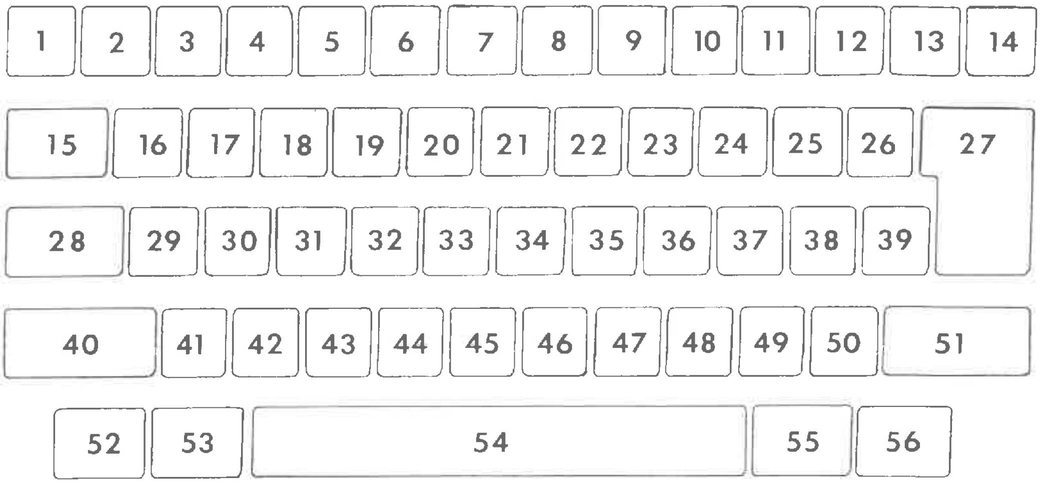

REF	PART NUMBER	ITEM
1	758300	TAB S/C
2	758301	1 US, EC
2	758356	1 FC
3	758302	2 US, EC
3	758357	2 FC
4	758303	3 US, EC
4	758358	3 FC
5	758304	4
6	758305	5
7	758306	6 US, EC
7	758359	6 FC
8	758307	7
9	758308	8 US, EC
9	758360	8 FC
10	758309	9
11	758310	0
12	758311	_/-
13	758312	+/=
14	758313	BACKSPACE
15	758314	TAB
16	758315	Q US, EC
16	758361	Q FC
17	758316	W US, EC
17	758362	W FC
18	758317	E US, EC

REF	PART NUMBER	ITEM
18	758363	E FC
19	758318	R US, EC
19	758364	R FC
20	758319	T US, EC
20	758365	T FC
21	758320	Y US, EC
21	758366	Y FC
22	758321	U US, EC
22	758367	U FC
23	758322	I US, EC
23	758368	I FC
24	758323	O
25	758324	P
26	758325	1/4 OVER 1/2 US, FC, EC
27	758326	RETURN/RELOCATE
28	758327	LOCK
29	758328	A
30	758329	S
31	758246	D/DICTIONARY
32	758247	F/FIND
33	758332	G
34	758333	H
35	758334	J
36	758335	K
37	758336	L

REF	PART NUMBER	ITEM
38	758337	:/; US, FC, EC
39	758338	"/' US, EC
39	758369	CIRCUMFLEX/GRAVE FC
40	758339	SHIFT, LEFT
41	758340	Z
42	758341	X
43	758342	C
44	758343	V
45	758248	B/BOLD
46	758345	N
47	758346	M
48	758347	,/, US, EC
48	758370	?/, FC
49	758348	./.
50	758349	? OVER / US, EC
50	758371	c CEDILLA/e ACUTE FC
51	758350	SHIFT, RIGHT
52	758351	CODE
53	758352	MARGIN L-R
54	758353	SPACEBAR/HALFSPACE
55	758354	WORDERASER
56	758355	CORRECT

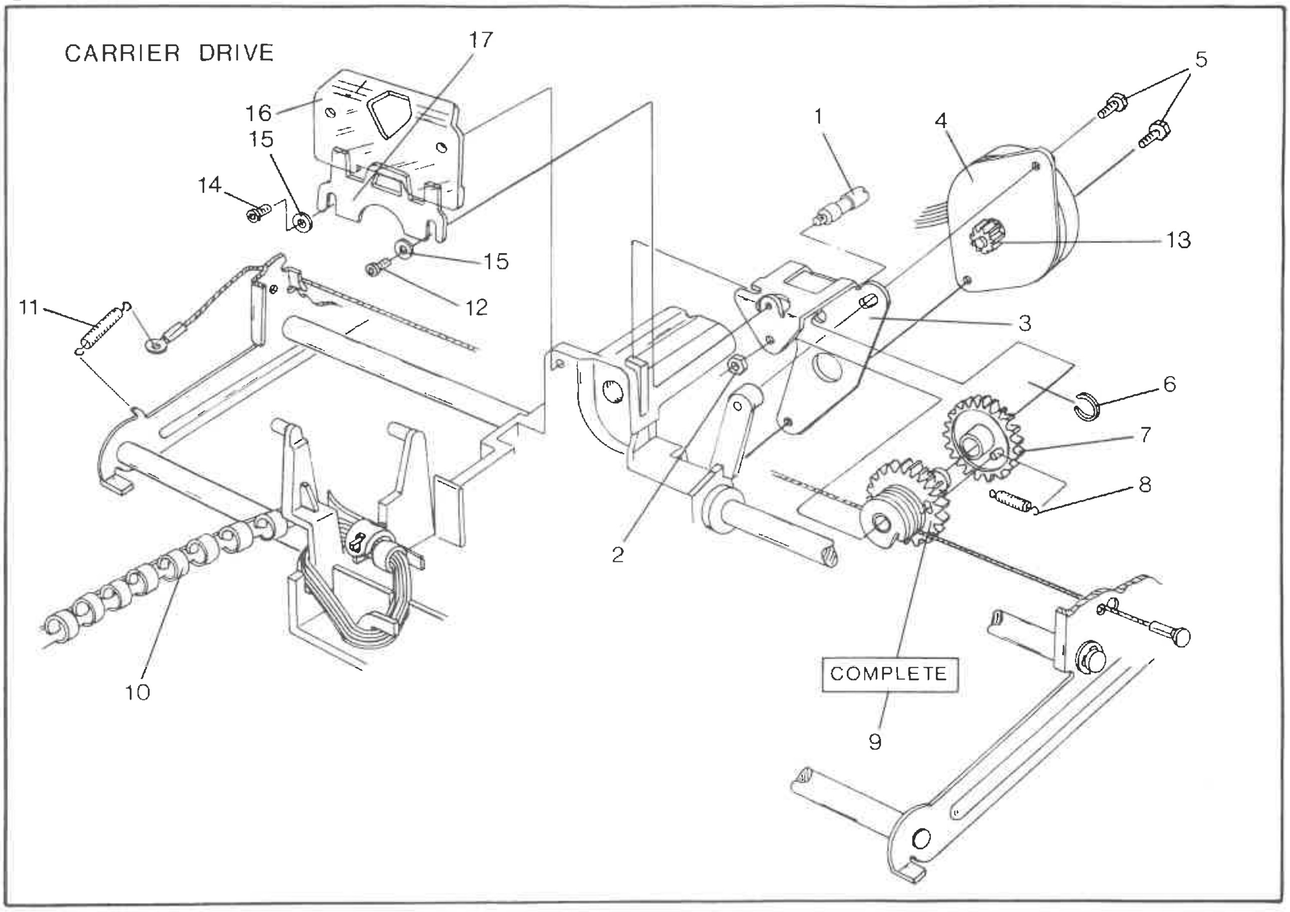

REF	PART NUMBER	PART NAME	QTY
1	747082	Capstan Pivot Screw	1
2	100200	Capstan Nut	1
3	751144	Capstan Bracket	1
4	770170	Carrier Motor Assembly	1
5	747057	Carrier Motor Screw	2
6	741374	Retaining Ring	1
7	743088	Carrier Drive Gear	1
8	743290	Capstan Scissor Spring	1
9	770319	Gear/Cable Assembly	1

REF	PART NUMBER	PART NAME	QTY
10	770317	Wire Binder Retainer	1
11	770430	Carrier Cable Spring	1
12	748366	Pan Torx Screw	1
13	364646	Carrier Motor Gear	1
14	748367	Self Tap Torx Screw	1
15	745345	Line Indicator Washer	2
16	770443	Line Indicator	1
17	770442	Line Indicator Bracket	1

COMPONENT DIAGRAM
CONTROL PC BOARD

MODELS 5AEA, 5ACA, 5AKA
5AWA, 5APA   P/N 770400 (Version 1)

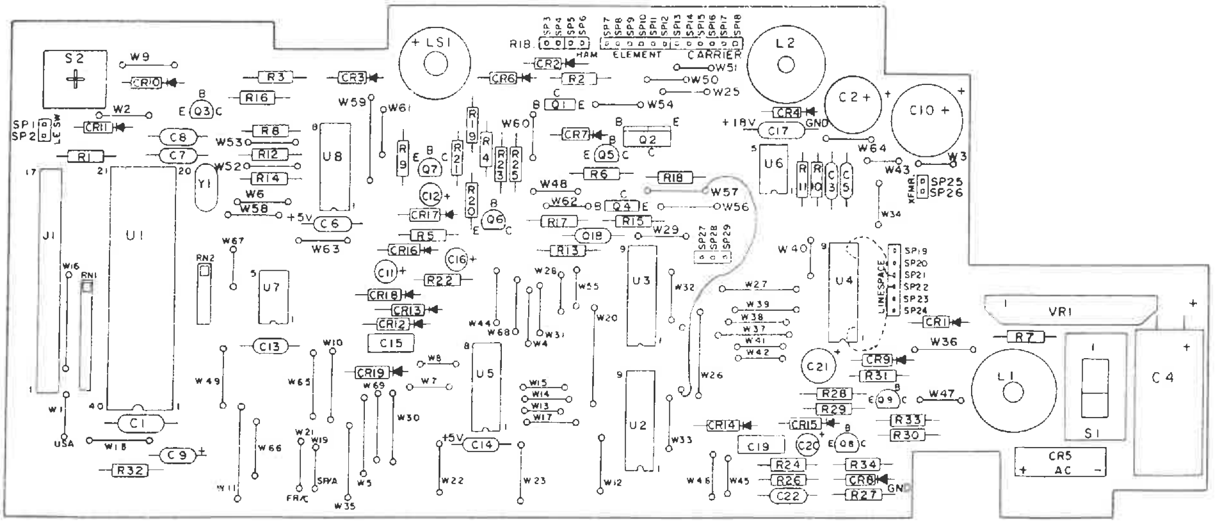

COMPONENT	PART NUMBER	DESCRIPTION
R7, R17, R18	701280	RESISTOR, 1.8 K OHM, 1/4 W, 5%
R8, R12	749348	RESISTOR, 180 OHM, 1/4 W, 5%
R9, R21	701287	RESISTOR, 39 K OHM, 1/4 W, 5%
R10	748281	RESISTOR, 40.2 K OHM, 1/4 W, 1%, METAL FILM
R11	748279	RESISTOR, 10 K OHM, 1/4 W, 1%, METAL FILM
R13, R14, R16	701272	RESISTOR, 3.9 K OHM, 1/4 W, 5%
R15	748221	RESISTOR, 27 K OHM, 1/4 W, 5%
R25	748227	RESISTOR, 220 K OHM, 1/4 W, 5%
R26	701297	RESISTOR, 5.6 K OHM, 1/4 W, 5%
R28	748226	RESISTOR, 82 K OHM, 1/4 W, 5%
R30	701299	RESISTOR, 8.2 K OHM, 1/4 W, 5%
R31, R34	701254	RESISTOR, 1 K OHM, 1/4 W, 5%
R32	727474	RESISTOR, 4.3 K OHM, 1/4 W, 5%
R33	701266	RESISTOR, 100 OHM, 1/4 W, 5%
RN1	723343	RESISTOR NETWORK, SIP, 8 RESISTORS, 10 K OHM
RN2	723345	RESISTOR NETWORK, SIP, 4 RESISTORS, 3.9 K OHM
SP1-SP29	748856	STAKE PIN, .025 SQUARE
S1	770822	SLIDE SWITCH, SPDT
S2	770851	LID SWITCH
U1	750447	IC, MICROPROCESSOR, MASKED, 8052 (FOR VERSION 1 PCB)
U2, U3, U4	770307	IC, QUAD DRIVER, L6221B
U5	705236	IC, TTL, HEX INVERTER, 74LS04
U6	770300	IC, SWITCHING REGULATOR, LM3578CT
U7 (U8 ON SOME BOARDS)	724700	IC, OPEN COLLECTOR, HEX BUFFER, 7406
U8 (U7 ON SOME BOARDS)	770830	IC, SERIAL RAM, CMOS, 128 WORD X 8 BIT
VR1	770303	REGULATOR, 12V, HYBRID, STR 2012
Y1	770304	CRYSTAL, QUARTZ, 12 mHZ
W2-W18, W20, W22-W29, W31-W69	705294	JUMPER WIRE

COMPONENT DIAGRAM
CONTROL PC BOARD

MODELS 5AEA, 5ACA, 5AKA, 5AWA, 5APA

P/N 770400 (Version 2)
770414

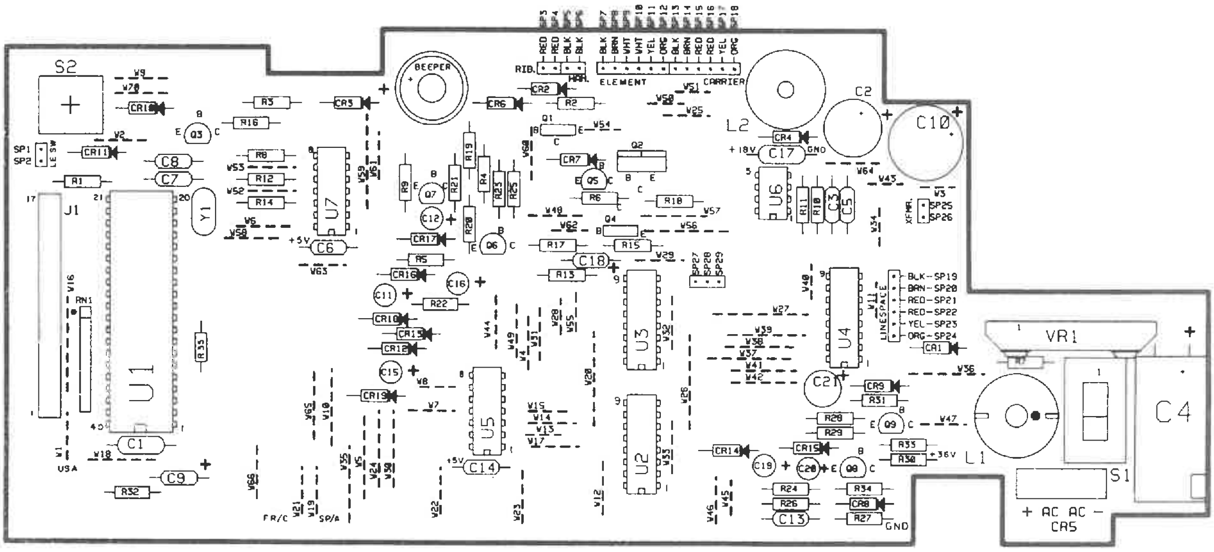

COMPONENT	PART NUMBER	DESCRIPTION
C1, C17	700349	CAPACITOR, .1 uF/50V, AXIAL, CERAMIC
C2	730006	CAPACITOR, 470 uF/6.3V, ELEC., ALUMINUM
C3	700360	CAPACITOR, 20 pF/100V, AXIAL, CERAMIC
C4	770215	CAPACITOR, 2200 uF/35V, ELEC., ALUMINUM
C5	700356	CAPACITOR, 2000 pF/50V, AXIAL, CERAMIC
C6, C13, C14, C22	700341	CAPACITOR, .01 uF/50V, AXIAL, CERAMIC
C7, C8	700365	CAPACITOR, 30 pF/100V, AXIAL, CERAMIC
C9	700390	CAPACITOR, 10 uF/10V, AXIAL, TANTALUM
C10	730001	CAPACITOR, 2200 uF/25V, ELEC., ALUMINUM
C11	770206	CAPACITOR, 1 uF/6.3V, ELEC., ALUMINUM
C12, C16	770207	CAPACITOR, 10 uF/16V, ELEC., ALUMINUM
C15, C19	730017	CAPACITOR, 1 uF/100V, RAD., ELEC.
C18	700398	CAPACITOR, 2.2 uF/25V, AXIAL, TANTALUM
C20	730014	CAPACITOR, 47 uF/16V, RAD., ELEC.
C21	770208	CAPACITOR, 22 uF/16V, RAD., ELEC.
CR1, CR7	700521	DIODE, 50V, SILICON, 1N4001
CR2, CR6	722058	DIODE, 1 AMP., FAST RECOVERY, 1N4933
CR3, CR8-CR19	709100	DIODE, SILICON, SWITCHING, 1N914
CR4	760421	DIODE, 1 AMP, SCHOTTKY, 1N5819
CR5	770801	4 AMP, BRIDGE RECTIFIER (7/32" LEAD SPACING)
J1	770150	CONNECTOR, .100, 17 POSITION, FLEX CABLE
L1	770310	INDUCTOR, VERTICAL MOUNT, 270 uH, 6 AMP
L2	770309	INDUCTOR, VERTICAL MOUNT, 330 uH, 1 AMP
LS1 (BEEPER)	728783	AUDIO TRANSDUCER, 12V
Q1	743086	TRANSISTOR, NPN, DARLINGTON, TO-126, 2N6039
Q2	770302	TRANSISTOR, NPN, DARLINGTON, TO-220, 2N6045
Q3, Q5-Q8	702518	TRANSISTOR, NPN, TO-92, 2N3904
Q4	740344	TRANSISTOR, PNP, DARLINGTON, TO-126, 2N6035
Q9	703714	TRANSISTOR, PNP, TO-92, 2N3906
R1	701252	RESISTOR, 220 OHM, 1/4 W, 5%
R2	771149	RESISTOR, 11 OHM, 1/4 W, FLYBACK
R3	746938	RESISTOR, 390 OHM, 1/4 W, 5%
R4, R19	701263	RESISTOR, 100 K OHM, 1/4 W, 5%

COMPONENT DIAGRAM
CONTROL PC BOARD

MODELS 5AEA, 5ACA, 5AKA, 5AWA, 5APA — P/N 770400 (Version 2) 770414

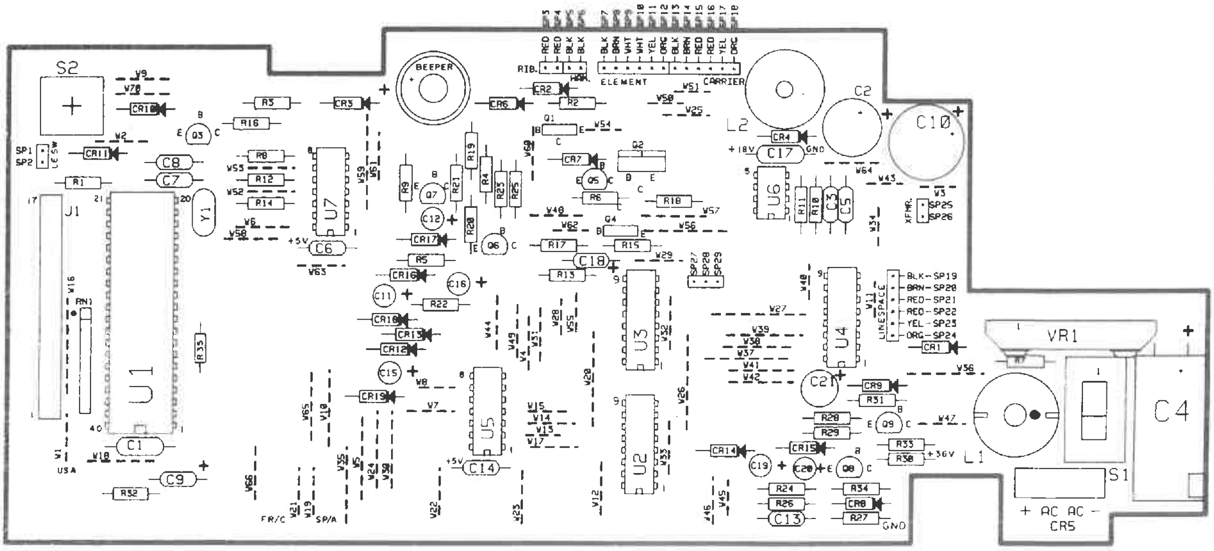

COMPONENT	PART NUMBER	DESCRIPTION
R5, R20, R27, R29	701275	RESISTOR, 22 K OHM, 1/4 W, 5%
R6, R22, R24	701268	RESISTOR, 10 K OHM, 1/4 W, 5%
R7, R17, R18	701280	RESISTOR, 1.8 K OHM, 1/4 W, 5%
R8, R12	749348	RESISTOR, 180 OHM, 1/4 W, 5%
R9, R21	701287	RESISTOR, 39 K OHM, 1/4 W, 5%
R10	748281	RESISTOR, 40.2 K OHM, 1/4 W, 1%, METAL FILM
R11	748279	RESISTOR, 10 K OHM, 1/4 W, 1%, METAL FILM
R13, R14, R16	701272	RESISTOR, 3.9 K OHM, 1/4 W, 5%
R15, R23	748221	RESISTOR, 27 K OHM, 1/4 W, 5%
R25	748227	RESISTOR, 220 K OHM, 1/4 W, 5%
R26	701297	RESISTOR, 5.6 K OHM, 1/4 W, 5%
R28	748226	RESISTOR, 82 K OHM, 1/4 W, 5%
R30	701299	RESISTOR, 8.2 K OHM, 1/4 W, 5%
R31, R34	701254	RESISTOR, 1 K OHM, 1/4 W, 5%
R32	727474	RESISTOR, 4.3 K OHM, 1/4 W, 5%
R33	701266	RESISTOR, 100 OHM, 1/4 W, 5%
R35	771000	RESISTOR, 3.9 K OHM, 1/8 W, 5%
RN1	723343	RESISTOR NETWORK, SIP, 8 RESISTORS, 10 K OHM
SP1-SP29	748856	STAKE PIN, .025 SQUARE
S1	770822	SLIDE SWITCH, SPDT
S2	770851	LID SWITCH
U1	750455	IC, MICROPROCESSOR, MASKED, 8052 (FOR VERSION 2 PCB)
U1	750498	IC, MICROPROCESSOR, MASKED, 8052, ANTI-STROBING SOFTWARE (FOR PCB P/N 770414)
U2, U3, U4	770307	IC, QUAD DRIVER, L6221B
U5	705236	IC, TTL, HEX INVERTER, 74LS04
U6	770300	IC, SWITCHING REGULATOR, LM3578CT
U7	724700	IC, OPEN COLLECTOR, HEX BUFFER, 7406
VR1	770303	REGULATOR, 12V, HYBRID, STR 2012
Y1	770304	CRYSTAL, QUARTZ, 12 mHZ
W2-W18, W20, W22-W69	705294	JUMPER WIRE

PART NUMBER	PAGE
700341	2
700341	4
700349	2
700349	4
700356	2
700356	4
700360	2
700360	4
700365	2
700365	4
700390	2
700390	4
700398	2
700398	4
700521	2
700521	4
701252	2
701252	4
701254	3
701254	5
701263	2
701263	4
701266	3
701266	5
701268	2
701268	5
701272	3
701272	5
701275	2
701275	5
701280	3
701280	5
701287	3
701287	5
701297	3
701297	5
701299	3
701299	5
702518	2
702518	4
703714	2
703714	4
705236	3
705236	5
705294	3
705294	5
709100	2
709100	4
722058	2
722058	4
723343	3
723343	5
723345	3
724700	3
724700	5
727474	3
727474	5
728783	2
728783	4
730001	2
730001	4
730006	2
730006	4
730014	2
730014	4
730017	2
730017	4
740344	2
740344	4
743086	2
743086	4
746938	2
746938	4
748221	3
748221	5
748225	2
748226	3
748226	5
748227	3
748227	5
748279	3
748279	5
748281	3
748281	5
748856	3
748856	5
749348	3
749348	5
750447	3
750455	5
750498	5
760421	2
760421	4
770150	2
770150	4
770206	2
770206	4
770207	2
770207	4
770208	2
770208	4
770215	2
770215	4
770300	3
770300	5
770302	2
770302	4
770303	3
770303	5
770304	3
770304	5
770307	3
770307	5
770309	2
770309	4
770310	2
770310	4
770801	2
770801	4
770822	3
770822	5
770830	3
770851	3
770851	5
770853	2
771000	5
771149	4

SMITH CORONA

SERVICE BULLET

TO: Technical Service & Training
Regional Service Managers
Service Locations
Electronic Servicing Dealers
Canada & International

NO: 19

PRODUCT: 5A SERIES ELECTRONIC TYPEWRITERS

SUBJECT: TYPE "B" KEYBUTTON REMOVAL

DATE: December 18, 1987

The Keybuttons on the Type "B" Keyboard announced in 5A Series Bulletin #18 (November 16, 1987) cannot be removed by prying up the Keybutton as on the original design Keyboard.

PRYING UP ON A TYPE "B" KEYBUTTON DAMAGES THE STRIKER SPRING. IF A STRIKER SPRING GETS DAMAGED, THE ENTIRE KEYBOARD MUST BE REPLACED.

TYPE "B" KEYBUTTON REMOVAL PROCEDURE

1. Remove the Keyboard from the Casing Base (see Removals in 5A Series Service Manual, Form 3-0713). Removal of the Keyboard Base Plate is not necessary, but the illustrations in this procedure show it removed.

2. When removing the Spacebar, Left Shift, or Return Keybutton, remove the Keybutton Bail next:

   A) For the Spacebar or Shift Keybutton, use a Spring Hook on the Wire Bail, and pull forward to disengage the Bail from the Keyboard and Keybutton.

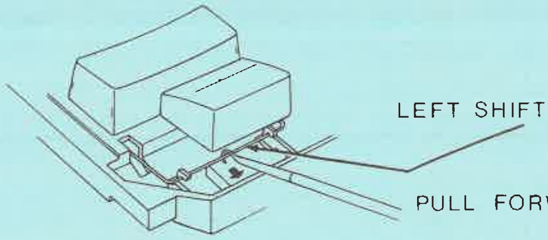

   B) For the Return Keybutton, depress the Keybutton slightly, push gently forward on the Sheet Metal Bail, and pivot the Bail out of the Keyboard.
   BE CAREFUL NOT TO DAMAGE THE LOCKING POST WHEN PUSHING THE BAIL FORWARD.

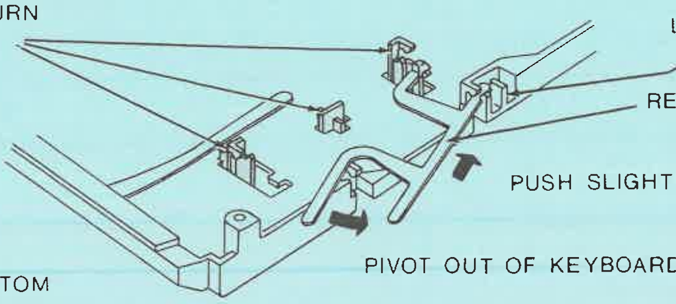

- OVER -

3. Turn the Keyboard upside down, and use a Spring Hook to raise the Striker Spring slightly to disengage it from the Keybutton. CAUTION: DO NOT RAISE THE STRIKER SPRING TOO FAR OR THE SPRING WILL GET DAMAGED. While holding the Spring away from the Keybutton, use the Spring Hook to unsnap the Keybutton Lock Tab from the Keyboard. The Keybutton drops out of the Keyboard Assembly. NOTE: The Spacebar has two Lock Tabs.

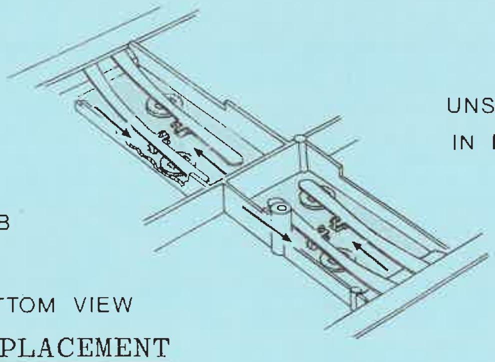

REPLACEMENT

1. Align the Keybutton with the holes inthe Keyboard, and snap the Keybutton in place.

2. A) When replacing the Spacebar or Left Shift Key Wire Bail, insert the Bail through the holes in the Keyboard. Make sure the ends of the Bail are properly aligned, and snap the front of the Bail into its locking tabs.

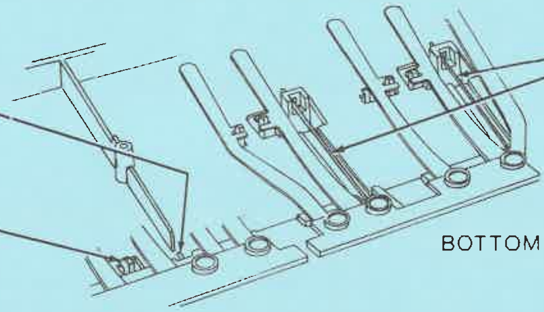

B) When replacing the Return Keybutton Sheet Metal Bail, depress the Keybutton slightly; gently push the end of the Bail slightly against the Keyboard post, and pivot the Bail into position. Make sure the Arms of the Bail seat in the Slots on the Keybutton.

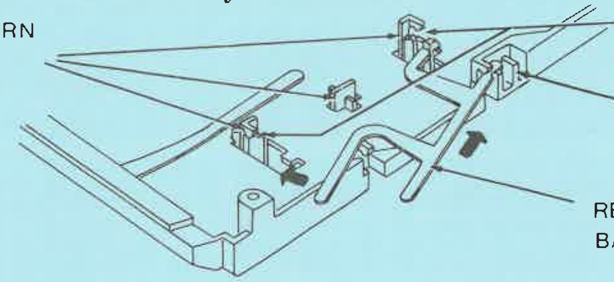

3. Replace the Keyboard in the Casing Base.

For prices, refer to the current Smith Corona Parts Price List. Smith Corona reserves the right to discontinue parts at any time and/or to furnish substitutes.

SMITH CORONA

SERVICE BULLETIN

TO: Technical Service & Training
Regional Service Managers
Service Locations
Canada and International
5A Series Electronic Dealers

NO: 14A

PRODUCT: 5A SERIES ELECTRONIC TYPEWRITERS

SUBJECT: 5A SERIES PC BOARD COMPONENTS

DATE: Revised January 4, 1988

REISSUED TO CORRECT PART NUMBERS

This Bulletin lists and illustrates the Electronic Components necessary for the maintenance of 5A Series PC Boards.

A Component Number is used for each component on the PC Board Component Diagram. This number is listed alphabetically and numerically in the parts listing beneath the illustration, and refers directly to the part number.

When a component has a variation in usage, the Component Number appears more than once in the Component column. Use extreme care in selecting parts in these areas.

If the part number is known, the page on which it is listed can be readily found by reference to the numerical listing at the end of the Bulletin.

ORDERING INSTRUCTIONS: State the correct part number on all parts orders. State additional information if asked for. It is not necessary to state the part name unless the number is not known. Do not order by Component Numbers.

NOTICE

Smith Corona encourages PC Board repair by qualified technicians. If, however, after trying to repair a PC Board, the Board still does not work properly, return the Board to Smith Corona National Service Stores for warranty or repair exchange.

IMPORTANT: SMITH CORONA DOES NOT REPLACE OR EXCHANGE DAMAGED PC BOARDS (IN OR OUT OF WARRANTY).

Boards will be returned as irrepairable and no credits or exchanges issued when:

- There are missing components
- There are damaged or lifted traces
- There are solder burns
- There is any other Board damage which makes the Board irrepairable

CONTENTS

SUBJECT	PAGE NUMBER
CONTROL PC BOARD (P/N 770400)	2-3
CONTROL PC BOARD (P/N 770414)	4-5

Smith Corona reserves the right to discontinue parts at any time and/or to furnish substitutes.

Printed in U.S.A.

COMPONENT DIAGRAM
CONTROL PC BOARD

MODELS 5AEA. 5ACA. 5AKA
5AWA. 5APA — P/N 770400 (Version 1)

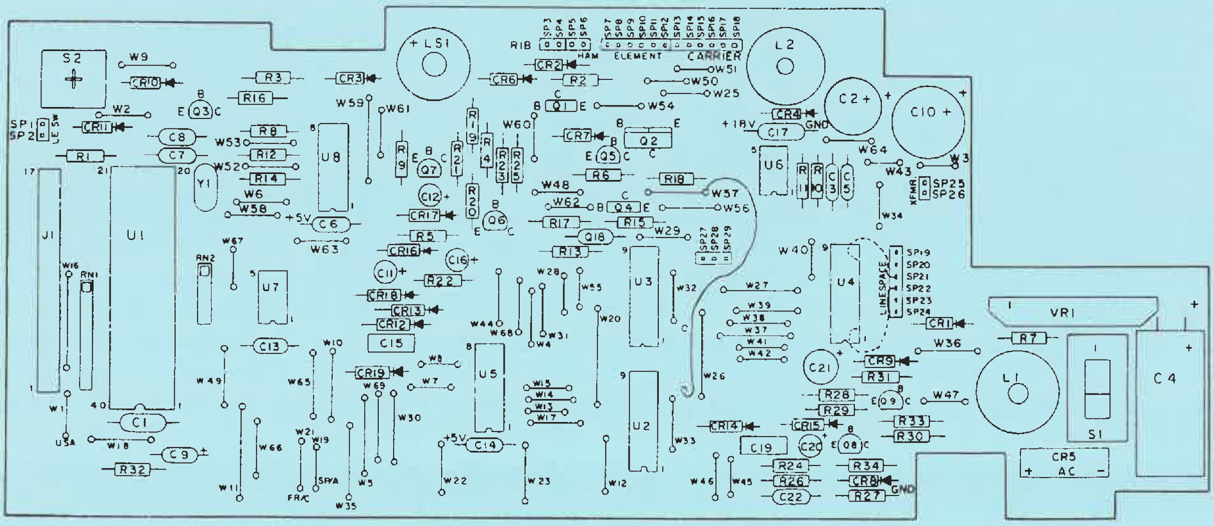

COMPONENT	PART NUMBER	DESCRIPTION
C1, C17	700349	CAPACITOR, .1 uF/50V, AXIAL, CERAMIC
C2	730006	CAPACITOR, 470 uF/6.3V, ELEC., ALUMINUM
C3	700360	CAPACITOR, 20 pF/100V, AXIAL, CERAMIC
C4	770215	CAPACITOR, 2200 uF/35V, ELEC., ALUMINUM
C5	700356	CAPACITOR, 2000 pF/50V, AXIAL, CERAMIC
C6, C13, C14, C22	700341	CAPACITOR, .01 uF/50V, AXIAL, CERAMIC
C7, C8	700365	CAPACITOR, 30 pF/100V, AXIAL, CERAMIC
C9	700390	CAPACITOR, 10 uF/10V, AXIAL, TANTALUM
C10	730001	CAPACITOR, 2200 uF/25V, ELEC., ALUMINUM
C11	770206	CAPACITOR, 1 uF/6.3V, ELEC., ALUMINUM
C12, C16	770207	CAPACITOR, 10 uF/16V, ELEC., ALUMINUM
C15, C19	730017	CAPACITOR, 1 uF/100V, RAD., ELEC.
C18	700398	CAPACITOR, 2.2 uF/25V, AXIAL, TANTALUM
C20	730014	CAPACITOR, 47 uF/16V, RAD., ELEC.
C21	770208	CAPACITOR, 22 uF/16V, RAD., ELEC.
CR1, CR7	700521	DIODE, 50V, SILICON, 1N4001
CR2, CR6	722058	DIODE, 1 AMP., FAST RECOVERY, 1N4933
CR3, CR8-CR19	709100	DIODE, SILICON, SWITCHING, 1N914
CR4	760421	DIODE, 1 AMP, SCHOTTKY, 1N5819
CR5	770853	4 AMP, BRIDGE RECTIFIER (5/32" LEAD SPACING)
CR5	770801	4 AMP, BRIDGE RECTIFIER (7/32" LEAD SPACING)
J1	770150	CONNECTOR, .100, 17 POSITION, FLEX CABLE
L1	770310	INDUCTOR, VERTICAL MOUNT, 270 uH, 6 AMP
L2	770309	INDUCTOR, VERTICAL MOUNT, 330 uH, 1 AMP
LS1 (BEEPER)	728783	AUDIO TRANSDUCER, 12V
Q1	743086	TRANSISTOR, NPN, DARLINGTON, TO-126, 2N6039
Q2	770302	TRANSISTOR, NPN, DARLINGTON, TO-220, 2N6045
Q3, Q5-Q8	702518	TRANSISTOR, NPN, TO-92, 2N3904
Q4	740344	TRANSISTOR, PNP, DARLINGTON, TO-126, 2N6035
Q9	703714	TRANSISTOR, PNP, TO-92, 2N3906
R1	701252	RESISTOR, 220 OHM, 1/4 W, 5%
R2	748225	RESISTOR, 11 OHM, 1/4 W, 5%
R3	746938	RESISTOR, 390 OHM, 1/4 W, 5%
R4, R19	701263	RESISTOR, 100 K OHM, 1/4 W, 5%
R5, R20, R27, R29	701275	RESISTOR, 22 K OHM, 1/4 W, 5%
R6, R22-R24	701268	RESISTOR, 10 K OHM, 1/4 W, 5%

SMITH CORONA

SERVICE BULLETIN INDEX

BULLETIN NUMBER	ISSUE DATE	SUBJECT
1	5/20/86	Servicing 5A Series Electronic Typewriters. REMARKS: Introduces service and parts information for Models 5AEA (XL 1000), 5ACA (SL 80), and related private brands.
2A	9/15/86	Carrier Capstan Clip (250159) REMARKS: Reissued 9/15/86 to announce reduced price.
3	8/8/86	Redesigned Element Pusher Spring (770924) REMARKS: Lighter Pusher Spring eliminates random strobing.
4	9/15/86	Redesigned Paper Table (748991) REMARKS: Eliminates Adjustment #10. New parts can be installed as a group.
5	9/15/86	Redesigned Linespace Pinion Pivot (752319) REMARKS: Eliminates spacer on new Frame Assembly (770985). New parts are not interchangeable with old.
6	9/15/86	Carrier Motor Gear (364646) REMARKS: Announces availability of replacement Gear for Carrier Motor.
7A	3/24/87	Service Training Videotape REMARKS: Reissued 3/24/87 as a reminder of videotape availability.
8	9/15/86	Transformer Failure on 5A Series Typewriters REMARKS: Describes how to check Bridge Rectifier when replacing failed Transforme
9	11/7/86	Lid Switch Actuator (771057) REMARKS: Resolves Lid Switch actuation problems.
10	11/7/86	Correction Lift Spring (428090) REMARKS: Illustrates correct spring positioning for consistent lift of Correction Bail.
11	2/16/87	Inductor L1 Lead Breakage REMARKS: Provides information for repairing Inductor L1 with broken leads.
12	2/16/87	Anti-Strobing Software and New PC Board for 5A Series Typewriters REMARKS: Announces new Control PC Board and Element Gear Spring which reduce stro
13	2/16/87	Redesigned Correction Bail Assembly (771058) REMARKS: New design Correction Bail and Bumper prevent Bail from sticking.
14A	1/4/88	5A Series PC Board Components REMARKS: Lists all electronic components for 5A Series PC Boards. Revised on 1/4/88 to correct part numbers.

AN ARROW INDICATES CHANGES OR ADDITIONS
KEEP THIS INDEX IN THE SERVICE MANUAL BINDER

- OVER -

BULLETIN NUMBER	ISSUE DATE	SUBJECT
15	3/24/87	5A Series Casing Bases REMARKS: Announces unique Casing Bases for country of manufacture.
16	5/8/87	Servicing New 5A Series Typewriters REMARKS: Introduces service and parts information for Models 5AEB (XL 2000), 5ACB (SL 105), and related private brands.
17	11/2/87	Redesigned Lid Switch Actuator REMARKS: New design uses left end switch as lid switch. Bulletin contains information for using new design jacketing parts on machines with previous design lid switch.
18	11/16/87	Redesigned Lid Switch Actuator and Type "B" Keyboard REMARKS: New design keyboard with lid switch announced in Bulletin 18. Bulletin contains information for using new design jacketing parts on machines with previous design keyboards and lid switch.
19	12/18/87	Type "B" Keybutton Removal REMARKS: Contains unique Type "B" Keybutton Removal procedures.
20	1/29/88	Type "B" Keyboards on XL 2000, SL 105, & Mark X REMARKS: Parts and Service Information for Type "B" Keyboards used with this Model Group.
21	1/29/88	Control PC Board Components for P/N 771535 REMARKS: Lists all electronic components for PC Board, 771535
22	1/29/88	XL 2000 (5AEB) Spanish American REMARKS: Lists unique parts for Spanish American XL 2000 (5AEB)
23	4/1/88	Zinc Die Cast Hammer (752637) REMARKS: Announces redesigned Hammer and revised adjustment specification.
24	6/27/88	Control PC Board Troubleshooting Guide REMARKS: For Models XL 1000, SL 80, and related private brands.
25	6/27/88	Servicing New 5A Series Electronic Typewriters REMARKS: Introduces service and parts info for Models 5AEC (XL 1500), 5AED (XL 2500), 5ACC (SL 500), 5ACD (SL 600), and related private brands.

SMITH CORONA

SERVICE BULLETI

TO: Technical Service & Training
Regional Service Managers
Service Locations
Canada & International
Electronic Servicing Dealers

NO: 30

PRODUCT: 5A SERIES
ELECTRONIC TYPEWRITERS

SUBJECT: **SHORT CARRIER CAPSTAN CABLE ASSEMBLY (768810)**

DATE: January 16, 1989

Short Carrier Capstan Cable Assembly (768810) and associated parts are illustrated and listed below. This new design provides better correction and print registration. In conjunction with this change, the E-Rings have been deleted from the Rear Carrier Shaft. This change was implemented for a short period, just prior to implementation of the Carrier Rack Drive System.

Unique service information is provided on the reverse side of this Bulletin.

Redesigned parts are not individually interchangeable with previous design parts.

SHORT CABLE DESIGN

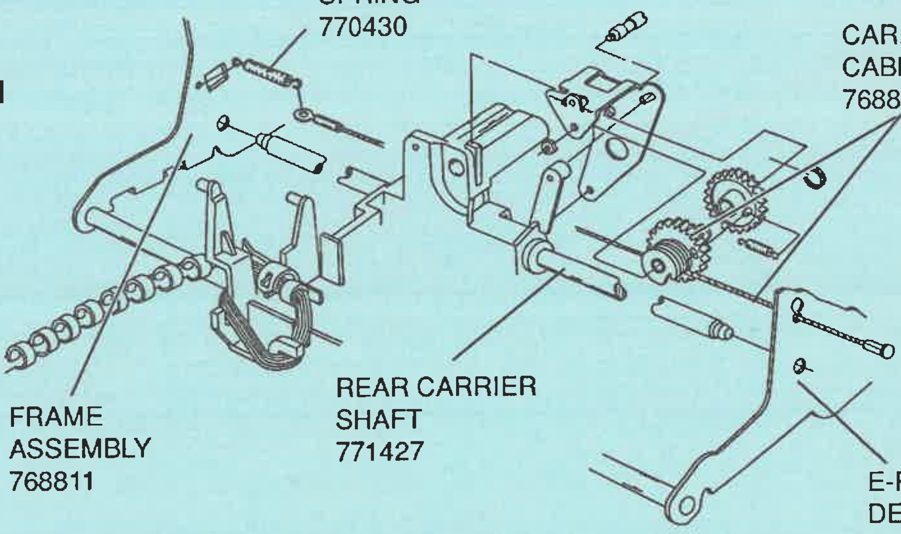

PART NUMBER	DESCRIPTION
768810	Carrier Capstan Cable Assembly
770430	Spring
771427	Rear Carrier Shaft
768811	Frame Assembly

Previous design parts will remain available from Service Stores.

Smith Corona reserves the right to discontinue parts at any time and/or to furnish substitutes.

- OVER -

Printed in U.S.A.

SERVICE INFORMATION

The Replacement Procedure on page 4-14 of 5A Series Service Manual (3-0757) applies to the Long Carrier Capstan Cable Assembly.

When replacing a Short Cable Assembly, mark the Cable approximately 12.9" (12 7/8") from the Ring Terminal instead of the dimension called for in the procedure (Replacement, Step A). Also, the Cable does **not** route around a guide in the Left Frame, since the Spring at the Ring Terminal end of the Cable attaches directly to the Left Frame (Replacement, Step F).

All other steps in the Replacement procedure apply to the Short Carrier Capstan Cable Assembly.

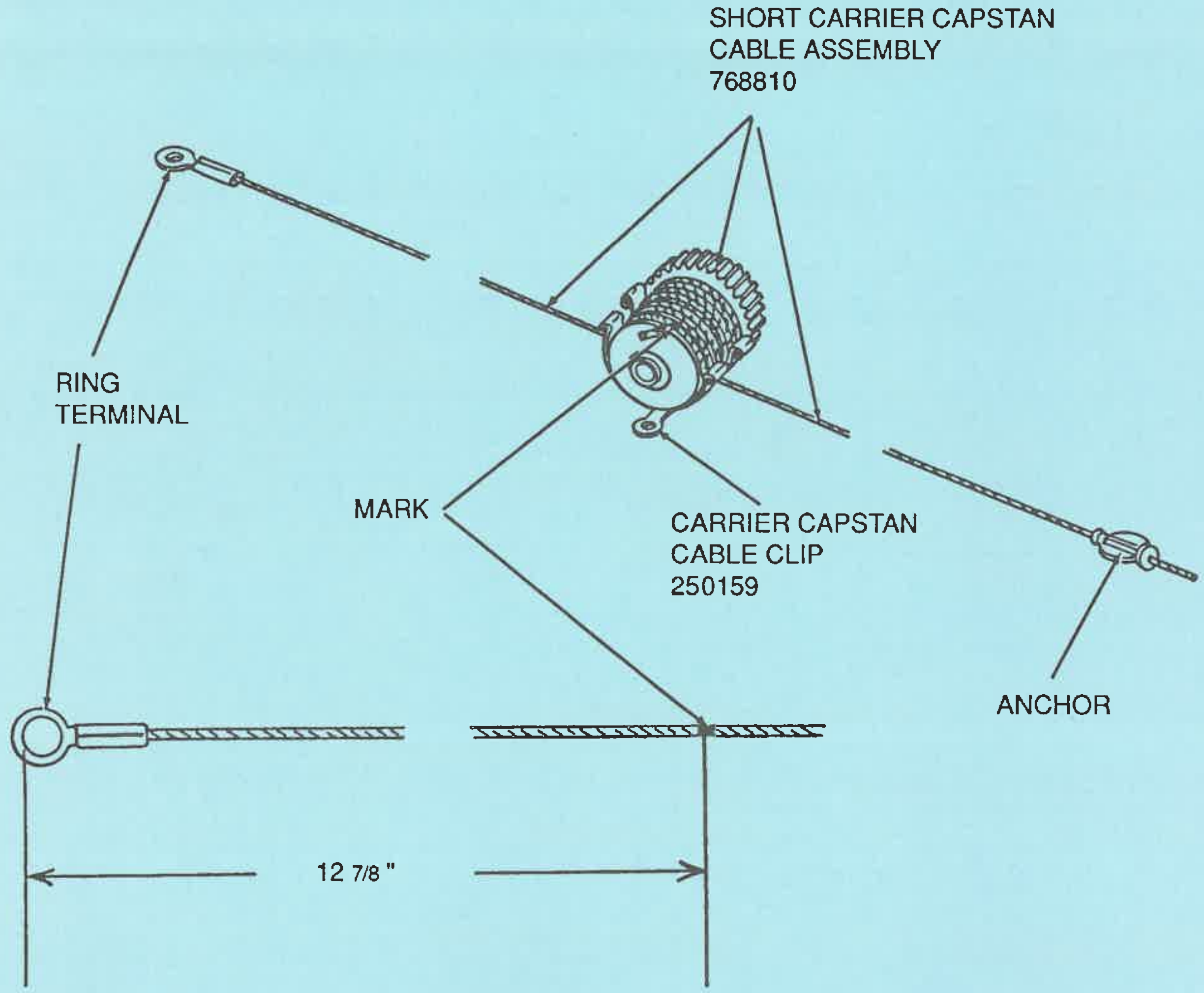

SMITH CORONA

SERVICE BULLETI

TO: Technical Service & Training
Regional Service Managers
Service Locations
Electronic Servicing Dealers
Canada & International

NO: 31

PRODUCT:
5A SERIES
ELECTRONIC TYPEWRITERS

SUBJECT: **NEW CONTROL PC BOARD (USA ONLY)**

DATE: January 16, 1989

Current production USA Models 5AEC, 5ACC, 5AKC, 5APC, 5AGA, and 5AWC use a new Control PC Board that includes a Microprocessor PC Board soldered in Microprocessor position U1. Also located on the Microprocessor PC Board is the Right Ribbon Switch Wiring Connector.

The new Control PC Board is interchangeable with the original design PC Boards, providing the longer ground cable included with Boards shipped from Service Stores is also installed.

Original design Boards can be substituted for the new Boards without modification. Just make sure that extra ground cable length is taken up away from the PC Board.

Also, the new Control Boards have no provision for language selection, and will be shipped to USA locations only. They will be shipped as Part Number 772800.

Component wire connections to this new PC Board are the same except the Right Ribbon Switch Plug connects to a two pin connector on the Microprocessor PC Board.

Smith Corona reserves the right to discontinue parts at any time and/or to furnish substitutes.

Printed in U.S.A.

SMITH CORONA

SERVICE BULLETI

TO: Technical Service & Training
Regional Service Managers
Service Locations
Electronic Servicing Dealers
Canada & International

NO: 32

PRODUCT:
5A SERIES
ELECTRONIC TYPEWRITERS

SUBJECT: **CARRIER RACK DRIVE SYSTEM**

DATE: January 16, 1989

Recent production includes a new Carrier Rack Drive System that eliminates the previous Carrier Capstan/Cable Drive System. The Carrier moves left or right by the rotational mesh of the Carrier Motor Gear Teeth in the Teeth of the Carrier Rack. A spring loaded Anti-Backlash Slider mounted above the Carrier Rack maintains constant pressure between the teeth of the Carrier Motor Gear and Carrier Rack.

Various changes occurred to other parts such as the Carrier Return Bracket, Frame Assembly, Carrier Motor, and Line Indicator Screw; therefore, the new parts are not interchangeable with the previous design.

There are no new adjustments or lubrication points for the Carrier Rack Drive System.

Illustrated on the reverse side of this Bulletin are the parts with the appropriate part numbers for the new parts.

Smith Corona reserves the right to discontinue parts at any time and/or to furnish substitutes.

- OVER -

Printed in U.S.A.

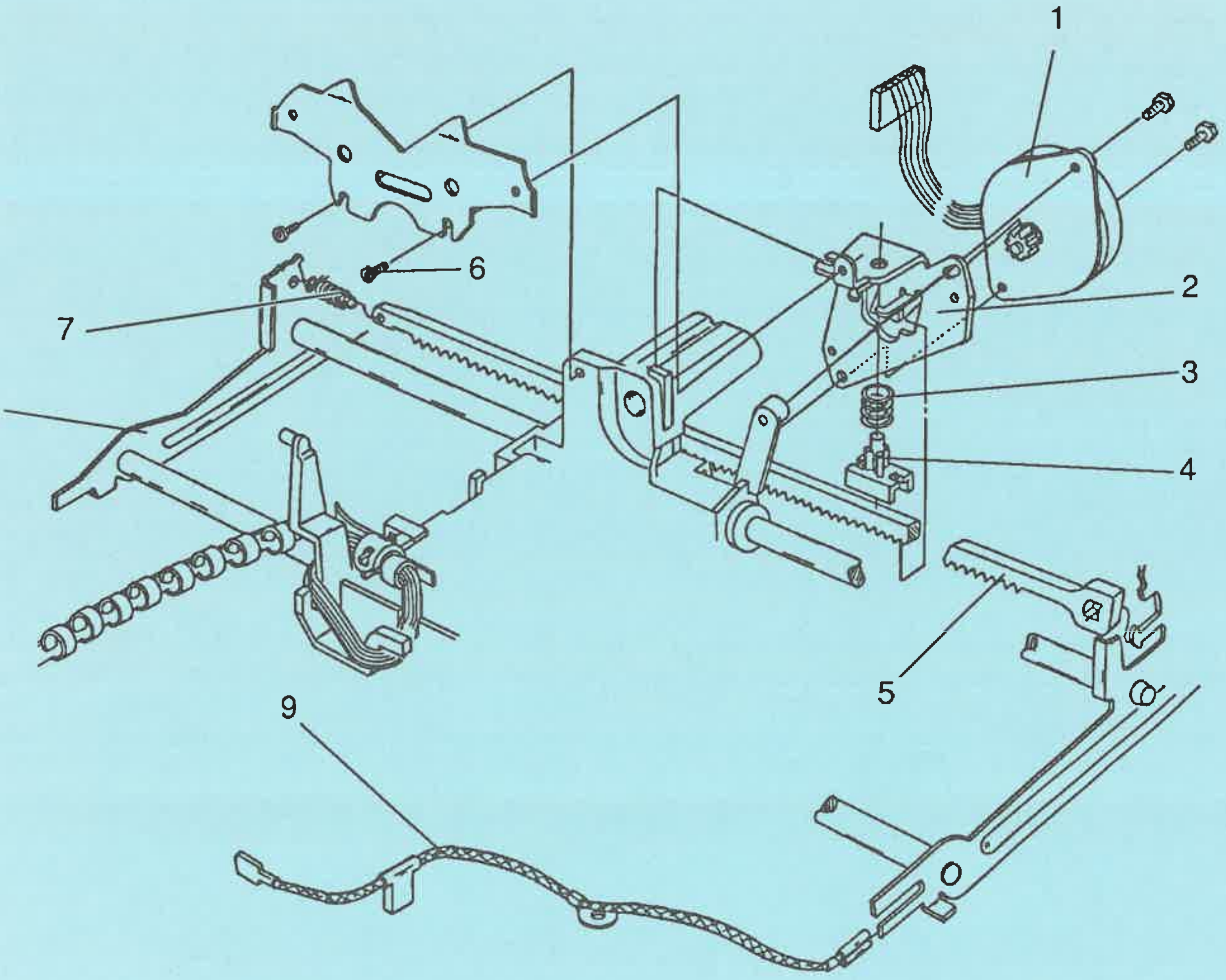

REF	PART NUMBER	PART NAME	QTY
1	770172	Carrier Motor Assembly (36 ohms)	1
2	768662	Carrier Return Bracket	1
3	751719	Spring	1
4	768668	Anti-Backlash Slider	1
5	768669	Carrier Drive Rack	1
6	781910	Screw	1
7	768661	Spring	1
8	768591	Frame Assembly Complete	1
9	772633	Ground Cable Assembly	1

The Capstan/Cable Drive System parts will remain available from Service Stores.

SMITH CORONA

SERVICE BULLETIN

TO: Technical Service & Training
Regional Service Managers
Service Locations
Electronic Servicing Dealers
Canada & International

NO: 27

PRODUCT:
5A SERIES
ELECTRONIC TYPEWRITERS

SUBJECT: REDESIGNED DECK AND PAPER BAIL

DATE: September 30, 1988

Current production 5A Series Typewriters include a redesigned Deck and Paper Bail. The Paper Bail Pivot Studs on the Deck are larger to prevent breakage, and the holes in the Paper Bail are larger to accommodate the larger Deck Studs.

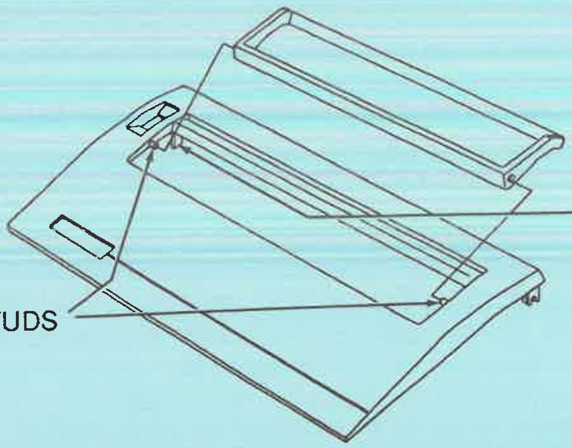

In addition to the Stud change, the Lid Switch Actuator Arm is ribbed for strength, and the number of Paper Bail Detents (P/N 771910) is changed to one per Deck.

Listed below are the part numbers for the new Decks and Paper Bails:

PART NUMBER	DESCRIPTION
772053	DECK, Platinum, 5AEC
772054	DECK, Silver Fog, 5ACC
772055	DECK, Platinum, 5AED
772056	DECK, Silver Fog, 5ACD
772057	DECK, Silver Fog, 5AKC
772058	DECK, Platinum, 5AWC (MARK VI)
772059	DECK, Platinum, 5APC
772060	DECK, Platinum, 5AWD (MARK XI)
772061	DECK, Platinum, 5APD
772065	DECK, Silver Fog, 5AGA
772880	PAPER BAIL ASSEMBLY, Black
772882	PAPER BAIL ASSEMBLY, Platinum

The new, more reliable Decks and the appropriate Paper Bail will be substituted on orders for previous design Decks. Previous Paper Bails (P/N 770680 & P/N 770683) remain available until supplies are depleted.

Smith Corona reserves the right to discontinue parts and/or furnish substitutes.

Printed in U.S.A.

SMITH CORONA

SERVICE BULLETIN INDEX
5A SERIES

BULLETIN NUMBER	ISSUE DATE	SUBJECT
1	5/20/86	Servicing 5A Series Electronic Typewriters. REMARKS: Introduces service and parts informatin for Models 5AEA (XL 1000), 5ACA (SL 80), and related private branc
2A	9/15/86	Carrier Capstan Clip (250159) REMARKS: Reissued 9/15/86 to announce reduced price.
3	8/8/86	Redesigned Element Pusher Spring (770924) REMARKS: Lighter Pusher Spring eliminates random strobing.
4	9/15/86	Redesigned Paper Table (748991) REMARKS: Eliminates Adjustment #10. New parts can be installed as a group.
5	9/15/86	Redesigned Linespace Pinion Pivot (752319) REMARKS: Eliminates spacer on new Frame Assembly (770985). New parts are not interchangeable with old.
6	9/15/86	Carrier Motor Gear (364646) REMARKS: Announces availability of replacement Gear for Carrier Motor.
7A	3/24/87	Service Training Videotape REMARKS: Reissued 3/24/87 as a reminder of videotape availabili

AN ARROW [———→] INDICATES CHANGES OR ADDITIONS

KEEP THIS INDEX IN THE SERVICE MANUAL BINDER

- OVER -

...LLETIN ...MBER	ISSUE DATE	SUBJECT
8	9/15/86	Transformer Failure on 5A Series Typewriters REMARKS: Describes how to check Bridge Rectifier when replacing failed Transformer.
9	11/7/86	Lid Switch Actuator (771057) REMARKS: Resolves Lid Switch actuation problems.
10	11/7/86	Correction Lift Spring (428090) REMARKS: Illustrates correct spring positioning for consistent lift of Correction Bail.
11	2/16/87	Inductor L1 Lead Breakage REMARKS: Provides information for repairing Inductor L1 with broken leads.
12	2/16/87	Anti-Strobing Software and New PC Board for 5A Series Typewriters REMARKS: Announces new Control PC Board and Element Gear Spring which reduce strobing.
13	2/16/87	Redesigned Correction Bail Assembly (771058) REMARKS: New design Correction Bail and Bumper prevent Bail from sticking.
14	3/16/87	5A Series PC Board Components REMARKS: Lists all electronic components for 5A Series PC Boards.
15	3/24/87	5A Series Casing Bases REMARKS: Announces unique Casing Bases for country of manufacture.
16	5/8/87	Servicing New 5A Series Typewriters REMARKS: Introduces service and parts information for Models 5AEB (XL 2000), 5ACB (SL 105), and related private brands.

SMITH CORONA

PUBLICATION BULLET

TO: Technical Service & Training
Regional Service Managers
Service Locations
Canada & International
Electronic Servicing Dealers

PUBLICATION: 5A Series Electronic Typewriters Service Manual, Form 3-0757

SUBJECT: **NEW & REVISED PAGES FOR SERVICE MANUAL, FORM 3-0757**

DATE: January 16, 1989

Enclosed are new and revised pages for 5A Series Electronic Typewriters Service Manual, Form 3-0757. Insert these pages in the Manual according to the placement instructions below.

PLACEMENT INSTRUCTIONS

REMOVE AND DISCARD		INSERT		
PAGE NO.	DATE	PAGE NO.	REVISION DATE	REASON FOR CHANGE
4-11	Original	4-11	1/89	Corrected reference numbers on drawing.
5-6	Original	5-6	1/89	Drawings modified for adjustment clarity.
7A-1	Original	7A-1	1/89	Added waveforms to Contents Page.
---	---	7F-1	Original	Added waveforms to Diagrams section.
8A-1	Original	8A-1	1/89	Added single sided component diagram and schematic.
---	---	8D-2	Original	Added component diagram for single sided Control PC Board.
---	---	8E-2	Original	Added schematic for single sided Control PC Board.

NOTE: An arrow [———►] indicates what has changed.

KEEP THIS BULLETIN IN THE **BLUE** SERVICE MANUAL BINDER

3-0757A

Printed in U.S.A.

SMITH CORONA

SERVICE BULLETIN

TO: Technical Service & Training
Regional Service Managers
Service Locations
Canada & International
Electronic Servicing Dealers

NO: 33

PRODUCT:
5A SERIES
ELECTRONIC TYPEWRITERS

SUBJECT: **GROUND CABLE ASSEMBLY MODIFICATION**

DATE: March 17, 1989

The Ground Cable Assembly for the 5A Series Electronic Typewriters is modified to assure a positive ground connection to the transformer. The ring terminal of the Ground Cable moved from the right transformer mounting screw to the left transformer hole where it is attached with a Self Tapping Torx Screw.

Previous Ground Cable P/N 772633 is replaced by P/N 772635. Use Self Tapping Screw P/N 781952 when installing the new cable.

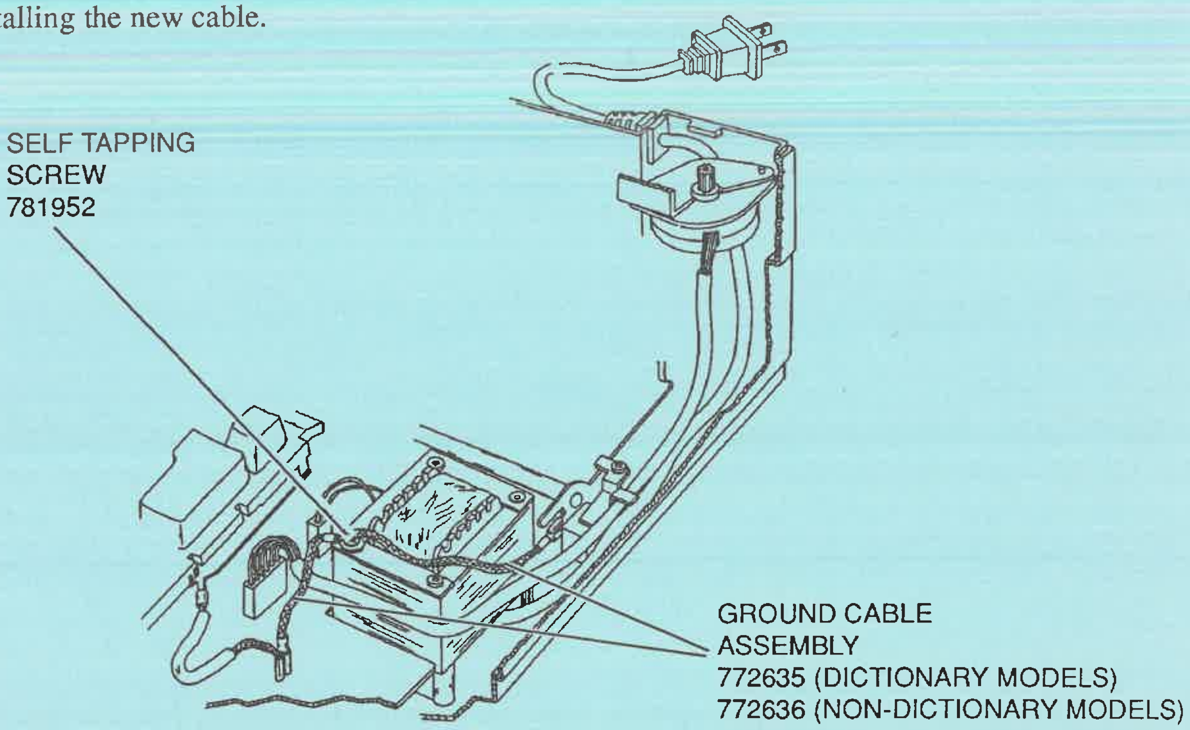

Part Number	Description
772635	Ground Cable Assembly (Dictionary Models)
772636	Ground Cable Assembly (Non-Dictionary Models)
781952	Self Tapping Screw

Smith Corona reserves the right to discontinue parts at any time and/or to furnish substitutes.

Printed in U.S.A.

SMITH CORONA

SERVICE BULLETIN

TO: Technical Service & Training
Regional Service Managers
Service Locations
Canada & International
Electronic Servicing Dealers

NO: 34

PRODUCT: 5A SERIES ELECTRONIC TYPEWRITERS

SUBJECT: **5A SERIES 5 VOLT REGULATOR FAILURE**

DATE: March 17, 1989

The 5A Series Power Supply Regulator was Motorola #MC 34063 (Smith Corona P/N 781723). It is currently Motorola #MC 34063A *or* NJRC #NJM2360D (Smith Corona P/N 782900).

If the Microprocessor on a Control PC Board fails, replace the Microprocessor **and** the 5 Volt Regulator with (P/N 782900).

Smith Corona reserves the right to discontinue parts at any time and/or to furnish substitutes.

SMITH CORONA

SERVICE BULLETIN

TO: Technical Service & Training
Regional Service Managers
Service Locations
Canada & International
Electronic Servicing Dealers

NO: 34

PRODUCT:
5A SERIES
ELECTRONIC TYPEWRITERS

SUBJECT: **5A SERIES 5 VOLT REGULATOR FAILURE**

DATE: March 17, 1989

The 5A Series Power Supply Regulator was Motorola #MC 34063 (Smith Corona P/N 781723). It is currently Motorola #MC 34063A *or* NJRC #NJM2360D (Smith Corona P/N 782900).

If the Microprocessor on a Control PC Board fails, replace the Microprocessor **and** the 5 Volt Regulator with (P/N 782900).

Smith Corona reserves the right to discontinue parts at any time and/or to furnish substitutes.

SMITH CORONA

SERVICE BULLETIN

TO: Technical Service & Training
Regional Service Managers
Service Locations
5A Series Electronic Dealers
Canada and International

NO: 25

PRODUCT: 5A SERIES ELECTRONIC TYPEWRITERS

SUBJECT: SERVICING NEW 5A SERIES ELECTRONIC TYPEWRITERS

DATE: June 27, 1988

This Bulletin provides information on the service support programs for Right Ribbon System 5A Series Typewriters, which include the following models:

MODEL NAME	MODEL PREFIX	MODEL NAME	MODEL PREFIX
SL 500	5ACC	SL 600	5ACD
XL 1500	5AEC	XL 2500	5AED
DEVILLE 450	5AKC	CXL 4700	5APD
CXL 4200	5APC	MARK XI	5AWD
MARK VI	5AWC	PREMIER 100	5AGA

SERVICE FEATURES:

The new typewriters incorporate three Keyboard Service functions that aid the technician with adjustments and troubleshooting. These functions are performed by depressing and holding down the appropriate Keybutton during power up.

The "Return" Keybutton initiates self typing and corrects a few characters on each line, which is useful for analyzing faults and for checking the success of a repair. The "E" Keybutton energizes Element Motor phases EB and EA', which eliminates use of the Element Motor Service Resistors. The "S" Keybutton provides a printout of the part number of the Master or Master and Slave (depending on model) software installed on the Control PC Board. These features are discussed in detail in the Troubleshooting section of the Service Manual (Form 3-0757).

SERVICE PUBLICATIONS: The following publications are available:

FORM NUMBER	DESCRIPTION
3-0757	Service Manual (See models listed above)
3-0756	Parts Manual (See models listed above)

Updates to these publications and all other publications will be made by a Publications Bulletin that has the same base form number as the publication being updated. For example, the first update to the Service Manual (3-0757) will be Publications Bulletin 3-0757A, the next update will be 3-0757B, and so on. Updates should be incorporated into the Manual. Reprints of a Manual (i.e. 3-0757-1, 3-0757-2, etc.) will include all previously issued Publications Bulletins as indicated on the Contents page of the reprint.

- OVER -

Printed in U.S.A.

SERVICE BULLETINS

The Service and Parts Manuals listed on the front for the new models incorporate all changes covered in Service Bulletins No. 1 through 24. Subsequent Service Bulletins for the new 5A Series Electronic Typewriters will also be blue in color. They will be released when product changes occur and when additional information is required. Bulletins are consecutively numbered; however, number gaps in your Bulletins are likely to occur because Bulletins are issued only to those they apply to. For example, Dealers would not receive an exclusive Bulletin on a private label model.

NOTE: Dealers receive one complimentary copy of each publication per mailing. Additional copies may be ordered from your parts ordering source. Dealers should contact their Regional Service Manager or sales representative to get on a mailing list.

SERVICE TOOLS

The tools required to service 5A Series Electronic Typewriters are listed on the Contents Page of the Service Manual (Form 3-0757). All required tools should be available from local suppliers, but may be ordered from your Smith Corona parts ordering source.

LUBRICANTS

Recommended lubricants are listed in the Lubrication and Cleaning Section of the Service Manual (Form 3-0757).

ORDERING PARTS

U.S.A. Dealers should refer to the current Service Parts Policies and Procedures form for parts ordering and parts return information.

PRICES

Prices of parts, tools, etc., are indicated in the current Smith Corona Electronic Parts Price List. Also included are exchange prices for out of warranty replacement of PC Boards. Service Manual prices are $15.00; Parts Manual prices are $2.00. Service Bulletins are no charge when requested. All may be ordered through National Service Stores.

Smith Corona reserves the right to discontinue parts at any time and/or to furnish substitutes.

SMITH CORONA

5A SERIES VERSION 2
Electronic Typewriters

COMMITMENT TO EXCELLENCE
SMITH CORONA

SERVICE MANUAL

Printed in U.S.A.   Form 3-0770   © Copyright 1989 by Smith Corona Corporation

PREFACE

This Manual provides service information for the following Smith Corona 5A Series Version 2 Electronic Typewriters:

Non-LCD Models:

Model Prefix	Model Name	Color(s)
5ACE	SL 500	Silver Fog
5AEE	XL 1500	Platinum
5AKD	Deville 450	Silver Fog
5APE	CXL 4200	Platinum
5AWE	Mark VI	Platinum
5AGB	Premier 100	Silver Fog
5ADD	300 DLE	Platinum

LCD Models:

Model Prefix	Model Name	Color(s)
5ACF	SD 650	Silver Fog/Accent Gray
5AEF	XD 4600	Platinum/Accent Gray
5APF	CXL 5100	Platinum/Accent Gray
5AWF	Mark XII	Platinum
5AED	400 DLD	Platinum/Accent Gray
5ASG	DX 4000	Silver Fog

The Manual is divided into sections that cover the different service areas required to service the machine. Thus, there is an Adjustment Section, Removals Section, etc. Refer to the Contents Page for a listing of subjects covered.

Except for the Specifications Sections, there is an Index of all information provided in each Section at the beginning of the Section.

Throughout the Manual, directional terms such as front, rear, top, bottom, left, right, etc., always refer to the machine as used by a typist. Consequently, "right" always refers to the Platen Knob side of the typewriter, regardless of the machine position necessary for checking a requirement or making an adjustment.

Satisfactory performance requires that all parts be properly adjusted and lubricated, and their movements be free of binds. Worn or broken parts should be replaced.

IMPORTANT

Some service procedures require working with static sensitive devices, such as the Printed Circuit Boards. Whenever a procedure involves one of these devices, the procedure is marked:

OBSERVE STATIC PRECAUTIONS

Read the reverse side of the Contents Page (Page ii) carefully for a full understanding of procedures to follow when working with static sensitive devices.

5A SERIES ELECTRONIC TYPEWRITERS SERVICE MANUAL

CONTENTS

Section	Subject
1	Specifications
2	Theory of Operation
3	Lubrication & Cleaning
4	Removals
5	Adjustments
6	Troubleshooting
7	Diagrams (Non-LCD Models)
8	Diagrams (LCD Models)

SERVICE TOOLS

In addition to common service tools (screwdriver, pliers, volt/ohmmeters, etc.) normally required for typewriter service, the following tools are needed for servicing 5A Series Electronic Typewriters:

Part Number	Description
250030	1/4" and 3/16" Open End Wrench
250036	1/4" Nut Driver
250065	#0 Phillips Screwdriver
250072	MTA Wire Inserter (.100" Centers)
250073	Feeler Gage Set .0015"-.025"
250162	Torx T-10 Screwdriver
250165	Torx T-8 Screwdriver

STATIC ELECTRICITY

Static electricity in the service work area damages PC Boards. Smith Corona Typewriters and Word Processors are equipped with state of the art MOS IC's that are susceptible to damage by static electricity.

Damage can occur when handling or touching a PC Board or even when touching a connecting pin or wire that leads to the Board.

Static electricity is sometimes tough to identify. It takes about 10,000 volts of static electricity to feel a "zap" or see a spark. As little as 1000 volts can damage an IC. A person wearing synthetic soled shoes walking across a carpet in low humidity conditions can generate a charge of over 35,000 volts, enough to destroy all the MOS IC's on a PC Board.

Furthermore, static induced failures do not always occur immediately following exposure, but may result in latent defects that show up in time.

RECOMMENDED STATIC PRECAUTIONS

- Do not have carpeting in the service area or on the workbench. Use an anti-static floor sealant on floor surfaces, particularly on vinyl surfaces.
- Connect metal workbenches to ground with a one Meg Ohm resistor cord. Use conductive anti-static work mats, or particle board or wood as a work surface.
- Wear a wrist strap that is connected to ground through a one Meg Ohm resistor whenever working on a machine with the top cover off, and, of course, when handling a PC Board, in or out of the pink shipping bag.
- Do not allow synthetic fiber clothing (polyester, nylon, etc.) to contact machine components or the PC Board.
- Do not slide a PC Board over any surface.
- Keep the following static generators away from the work area: *Styrofoam (including coffee cups) -- Candy wrappers -- Cellophane*

Note: The pink bag in which Boards from Service Stores' are shipped ***does not*** induce a static charge, but it also ***does not*** prevent a static charge from going through to the PC Board. Take static precautions when handling a bagged Board.

The following anti-static equipment is available from National Service Stores:

Part Number	Description
250166	Velcro Adjustable Wrist Strap. Has snap connection for Coiled Cord.
250167	10 Foot One Meg Ohm Coiled Cord. Has banana plug for connection.
250168	Alligator Clip. Used for connecting Coiled Cord directly to an available ground.
250096	Circuit Tester with Ground Jack. Used for connecting Coiled Cord to a power outlet's ground. Particularly useful when no other ground point is available. Circuit Tester also checks for correct wiring and polarity.
250501	Anti-Static Floor Sealant (1 gallon).

SECTION 1

SPECIFICATIONS

Power Supply

Power Requirements: *See Electrical Rating Label on Bottom of Casing Base.*

117 VAC/60 Hz
or
220 VAC/50 Hz
or
240 VAC/50 Hz

Thermal Protection:	130° C Thermal Cutout in Transformer
Transformer Output:	24 VAC
Approximate Power Consumption:	6.5 Watts (Idle) 45 Watts (Printing)

Keyboard

- 44 Key Electronic Keyboard
- Molded Dome Conductive Switches with Leaf Return Springs
- 7 x 8 Electronic Keyboard Matrix
- Repeat Keys: All 44 Keys

Electronics

Non-LCD Models: Control PC Board with 8052 Microcontroller. Integrated power supply on board supplies +5 VDC (Logic) and +18 VDC (Motors, Solenoids). 128 character current typing line correction memory. 10 character keyboard input buffer.

LCD Models: Control PC Board with 8032 Master Microcontroller, 8052 Slave Microcontroller, and 1 Megabit Master ROM on USA Models (2 Megabit ROM on International Models) for the Spell-Right Dictionary. Integrated Power Supply on Control PC Board supplies +5 VDC (Logic) and +18 VDC (Motors, Solenoids). 108 character current typing line correction buffer. 16 character Keyboard input buffer.

Printing/Paper Handling

Printing Technique:	Fully formed character Daisy Print Element
Character Set:	96 printable characters on Print Element
Character Spacing (Pitch):	10 CPI: .100" (2.5mm) per space 12 CPI: .083" (2.2mm) per space
Typing Line Length	
Non-LCD Models:	9" (228.6mm) 10 Pitch: 90 Characters per line 12 Pitch: 108 Characters per line
LCD Models:	8.9" (226.1mm) 10 Pitch: 89 Characters per line 12 Pitch: 107 Characters per line

Printing/Paper Handling (continued)

Print Speed:	10 Characters per Second (maximum)	
Print Direction:	Unidirectional (left to right) in Typewriter Mode (all Models) Bi-directional from Memory (LCD Models)	
Margins:	• Left Margin preset at space 12 (10 pitch) • Right Margin preset at space 72 (10 pitch) • Machine beeps at Right Margin • Types through Margin after stopping or beeping at Margin	
Tabs:	Up to 8 programmable tab settings	
Ribbon Cassette Yield:	*Correctable Carbon* ·53,000 Characters	*Multi-Strike* ·205,000 Characters
Correction Cassette Yield:	*Lift Off* *(For Correctable)* ·2700 Characters	*Cover Up* *(For Multi-Strike)* ·1600 Characters
Paper Feed:	Friction, Single Sheets or Forms	
Linespacing:	• 1 (6 Lines per Inch) • 1 1/2 (4 Lines per Inch) • 2 (3 Lines per Inch)	• 1/2 for Super & Subscript • Variable through Platen Knob
Maximum Paper Width:	12" (304.8mm)	
Paper Capacity:	1 original plus 2 copies	
Stepper Motors:	4 Phase, Bi-directional, Permanent Magnet	

	Carrier Motor	*All USA & Non-LCD Int'l Element Motor*	*All Int'l LCD Models Element Motor*	*Index Motor*
Step Angle:	7.5°	7.5°	7.5°	7.5°
Steps Per Revolution:	48	48	48	48
Resistance Per Phase:	36 Ω	16 Ω	24 Ω	50 Ω
Run Voltage:	+18 VDC	+18 VDC	+18 VDC	+18 VDC
Hold Voltage:	+5 VDC	None	None	None

Physical Dimensions

- Height: 4.6" (116.8mm)
- Width: 15.7" (398.8mm)
- Depth: 12.9" (327.7mm)
- Net Weight: Approx. 11.5 lbs (5.2 Kg)

Environmental Conditions

- Operating Temperatures: 55° F to 100° F (13° C to 38° C)
- Operating Relative Humidity: 10% to 80%
- Storage Temperature: -40° F to 160° F (-40° C to 71° C)
- Storage Relative Humidity: 5% to 95%

SECTION 2

THEORY OF OPERATION

INDEX

	Subject	Page Number
1A.	Power Supply (Non-LCD Models)	2-2
1B.	Power Supply (LCD Models)	2-3 & 2-4
2.	Initialization	2-5
3.	Keyboard	2-6
4A.	Electronics (Non-LCD Models)	2-7
4B.	Electronics (LCD Models)	2-8
5.	Stepper Motors	2-9
6.	Carrier Drive	2-10
7.	Element Drive	2-11
8.	Print Hammer	2-11
9.	Ribbon Cassette Feed/Correction Cassette Lift & Feed	2-12
10.	Ribbon Cassette Feed Mechanism	2-13
11.	Correction Cassette Lift & Feed Mechanism	2-13
12.	Right Ribbon System	2-13
13.	Paper Feed	2-14

1A) Power Supply (Non-LCD Models)

When the Typewriter's AC plug is inserted into an AC wall outlet, line voltage is applied to the primary and secondary windings of the transformer, and stepped down voltage (24 VAC) is applied to the Power Switch. When the Power switch is moved to the ON position, the (24 VAC) is applied to the input of the Bridge Rectifier (CR19).

The output of the Bridge Rectifier, applies filtered 24 VDC to the Source (S) of MOSFET Q1. Regulator U3 provides a switching input to the Gate (G) of Q1. With this input at the Gate, MOSFET Q1 provides a regulated square wave output at its Drain (D). The square wave output is applied to the input of an LC Circuit consisting of Coil L1 and Capacitor C7. This LC Circuit produces a regulated +18 VDC ± 5% output at the positive side of Capacitor C7.

The regulated +18 VDC is applied to Pins 1, 6, 7, and 8 of Regulator U4. With this input, U4 provides a regulated +5 VDC ± 5% output to the positive side of Capacitor C10.

The Control PC Board has a Watchdog Circuit that monitors correct voltage levels to the following components:

A) Hammer Solenoid
B) Ribbon Solenoid
C) Element Enable EEN
D) Carrier Phase CB
E) Carrier Hold CPS

The Watchdog Circuit keeps track of critical Motor and Solenoid Driver functions of the Printed Circuit Board to insure reliable and safe operation. This circuit consists of three stages. When a Motor or Solenoid circuit malfunctions, the first stage of its respective Watchdog Circuit is activated.

First Stage: If the Element Motor enable signal stays low too long (this is an active low signal), Q6 turns off and C16 charges enough to forward bias CR7. The Ribbon Solenoid Circuit uses Q7, C17, and CR5 for this first stage, and the Hammer Circuit uses Q5, C15, and CR4. In all three of these cases, Transistors Q5-Q7 are normally on, which keeps its respective Capacitor from charging.

The first stage of the Carrier Motor Watchdog Circuit is set up differently. For this Circuit, the voltage on the Capacitor is regulated in two ways. In the idle state (not typing), the Carrier Hold voltage is monitored by a voltage divider. If the Carrier Power Supply Transistor (Q10) shorts, this divider charges C13 to a level high enough to forward bias CR6. In the Typing Mode, Q10 normally conducts. To counteract this and not trip the Watchdog Circuit every time the Carrier moves, another circuit is utilized. In this case, C14 (normally charged) discharges while phase CB is active. This discharge creates a negative voltage on the negative dielectric of C14. This negative charge counteracts the higher voltage placed on the divider by Q10 and maintains a low voltage level across C13. If phase CB is not activated while Q10 is conducting, C13 charges and the Watchdog Circuit trips.

Each first stage is independent and can be deactivated individually by disconnecting (opening) its respective Diode (CR4-7).

COMPONENT DIAGRAM
CONTROL PC BOARD
MODELS : 5AEF, 5ACF,
5AWF, 5APF,
5ASG, 5ADE

P/N 773901
P/N 773918

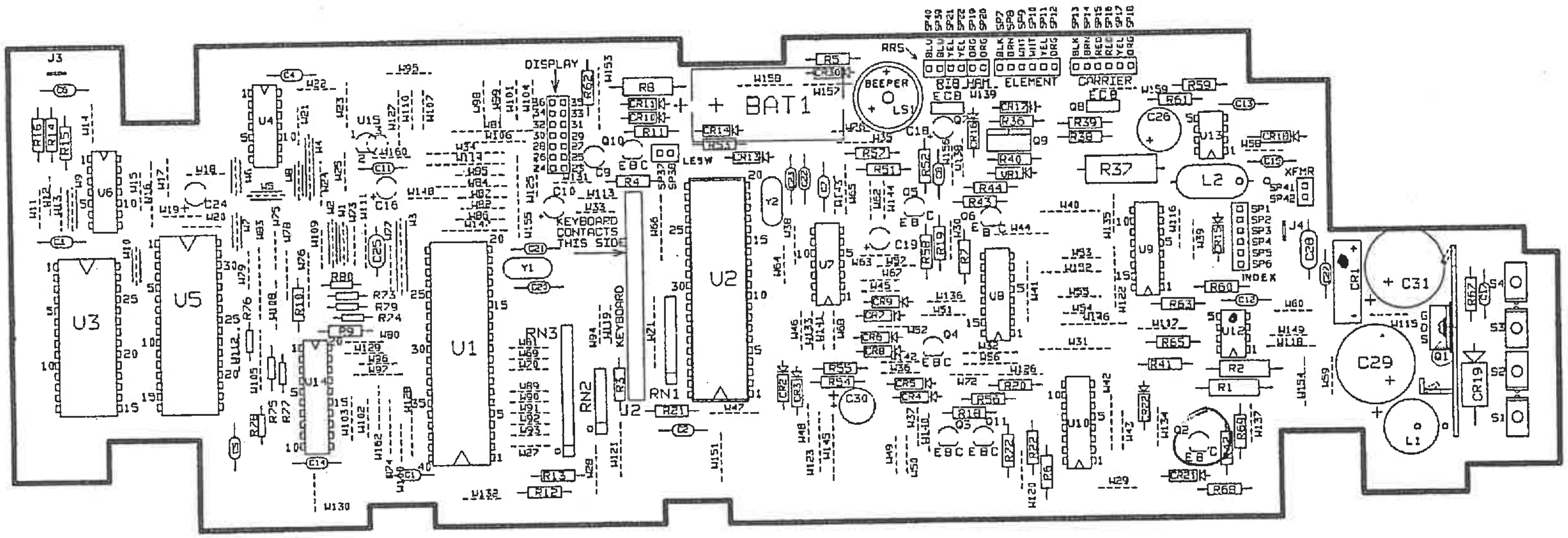

1A) Power Supply (Non-LCD Models) continued

Second Stage: The second stage of the Watchdog Circuit consists mainly of Q3, Q4, and C12. When one of the pre-stages "trips," C12 begins to charge. Once C12 reaches approximately +1V, Q4 switches on. Q4 in turn activates Q3 which begins the final stage in the Watchdog Circuit.

Final Stage: The final stage consists of C11, Q2, and U3, Pin 7. If the fault exists long enough, C11 charges and Q2 switches on. Q2 is connected to the current sense line on the 18V regulator. When Q2 conducts, the increased current draw at U3, Pin 7 shuts down the 18V regulator (U3). With U3 shut off, Q1 shuts down, which effectively causes the +18 VDC to decrease below a level that allows Regulator U4 to operate. When the output of U4 drops low enough, all the functions of the Control PC Board shut down. This condition will last for approximately 2-4 seconds, and when cleared, complete reinitialization occurs. If the condition is not cleared, the Watchdog Circuit trips again and does not allow initialization to take place. The machine is inoperative.

The AC or DC Power Supplies do not have a replaceable fuse. For safety there is a non-replaceable thermal cutout in the Line Transformer.

1B) Power Supply (LCD Models)

When the typewriter's AC plug is inserted into an AC wall outlet, line voltage is applied to the primary and secondary windings of the transformer, and stepped down voltage (24 VAC) is applied to the input of Bridge Rectifier (CR1) and the base resistors of Transistor (Q2). The output of the Bridge Rectifier, applies filtered 24 VDC to the Source (S) of MOSFET Q1. Regulator U12 provides a switching input to the Gate (G) of Q1. With this input at the Gate, MOSFET Q1 provides a regulated square wave output at its Drain (D). The square wave output is applied to the input of an LC Circuit consisting of Coil L1 and Capacitor C29. This LC Circuit produces a regulated +18 VDC ± 5% output at the positive side of Capacitor C29. The regulated +18 VDC is applied to Pins 1, 6, 7, and 8 of Regulator U13. With this input, U13 provides a regulated +5 VDC ± 5% output to the positive side of Capacitor C26.

The +5 VDC is applied to various circuits and Integrated Circuits on the Control PC Board. The collector circuit of Transistor Q2 requires +5 VDC, but the base circuit requires 24 VAC so Q2 can turn on and shut off at a 60 cycle rate. This output is connected to the PDI Port of the Master Microprocessor U1 and is referenced PDI (Power Down Interrupt). The Master processor continues to function as long as the PDI continues to toggle.

Continued . . .

1B) Power Supply (LCD Models) (continued)

The Control PC Board has a Watchdog Circuit that monitors correct voltage levels to the following components:

A) Hammer Solenoid
B) Ribbon Solenoid
C) Element Enable EEN
D) Linefeed Enable
E) Carrier Hold CPS

The Watchdog Circuit on LCD Models also protects the hardware driver circuits from malfunctions. The Watchdog Circuit consists of 3 consecutive stages. Each stage has a preset amount of delay time to eliminate false resets.

First Stage: The first stage of the Watchdog Circuit monitors the Ribbon, Element, Index, and Carrier Hardware Driver stages. In each case, the signal monitored is an active low enable. If any one of these signals stays active for an abnormally long period of time, the first stage of the Watchdog Circuit trips.

When the slave activates the Ribbon Solenoid, Element, Index, or Carrier Motor Circuit, the circuits respective diode in the first stage of the Watchdog Circuit is forward biased. These diodes are; CR6 for Element, CR7 for Ribbon, CR8 for Index, and CR9 for Carrier. When none of these diodes are active, Q11 conducts because of the base voltage provided by voltage divider R20, R56, and R18. Q11 in turn keeps Q3 conducting to dissipate any charge on C30. When C30 shorts, this prevents the next stage of the Watchdog Circuit from firing.

When one of the diodes is forward biased, the Voltage Divider is temporarily disabled and Q11 and Q3 no longer conduct. If this state remains long enough to charge C30 (through R54), then CR4 is forward biased and the next stage of the Watchdog Circuit trips.

The Hammer Watchdog Circuit bypasses this first stage of the Watchdog Circuit for quicker reaction to any malfunction in this circuit. When the Hammer is active, U7 Pin 6 switches from a logic low to a logic high. In the logic low state, C19 stays discharged. If a logic high state exists long enough, C19 charges fully, and CR5 is forward biased to trip the next stage of the Watchdog Circuit.

Second Stage: When CR4 or CR5 are forward biased and a sufficient voltage level (approximately 1V), is provided to the voltage divider between R19 and R52, Q5 turns on. With Q5 on, C16 begins to discharge to ground. When the charge on C16 drops below approximately 2V, U6 Pins 9 & 10 go low and U6 Pin 8 goes high, triggering a reset in the Master, Slave and Ram IC. This stage of the Watchdog Circuit can also be enabled by a dip in the 5V line. Reset IC (U15) monitors the 5V line on Pin 2, and using Pin 3 as a ground reference, places a low on Pin 1 if the 5V line dips below approximately 4.5V. This also places a low on U6 Pins 9 & 10, which causes U6 Pin 8 to become a logic high and reset the system.

1B) Power Supply (LCD Models) (continued)

Third Stage: The third stage resets the Watchdog Circuit to its standby state and allows the system to reinitialize. This circuit consists of a voltage divider R57, R51, and C8 for transistor Q4. When the Watchdog Circuit is active long enough to charge C8 above approximately 1V, Q4 conducts placing a low on the base of Q5. Q5 shuts off and C16 charges. With C16 charged, a logic high is placed on U6 Pins 9 & 10, and U6 Pin 8 returns to a logic low, which returns control to the microprocessors allowing initialization to take place.

The AC or DC Power Supplies do not have a replaceable fuse. For safety there is a non-replaceable thermal cutout in the Line Transformer.

2) Initialization

The initialization sequence is described below. Briefly, the sequence is as follows:

A) When power is turned on, the Ribbon Solenoid quickly energizes to insure the Ribbon mechanism is in its proper starting position.

B) The Electronics moves the Carrier slightly to the right, to insure Carrier is not at the Left End Switch and then slightly to the left to insure the Carrier is not at the right end of the machine.

C) The Index Motor Shaft rotates 1/2 forward linespace and then 1/2 reverse linespace to establish a positive writing line.

D) Then, the Element Motor rotates quickly to snap the Element onto the Drive Disc, and stops.

LCD Models: Note: If a Right Ribbon Cassette is not placed in the Carrier or the wrong Ribbon Cassette is placed in the Carrier or the Lid Switch is closed (Lid open), steps A through D are performed, but the Carrier only moves right approximately 1 $^1/_4$" and stops. The LCD displays "LID?-RIBBONS?." If the proper Ribbon Cassette is installed in the Carrier and the Lid is closed, the machine continues its normal initialization sequence.

E) The Carrier moves left until the Left End Switch Positioner closes the Left End Switch; quickly moves right to open the Switch; left to close the Switch again; and continues approximately .100" further before stopping.

Non-LCD Models: Note: If a Right Ribbon Cassette is not placed in the Carrier or the wrong Ribbon Cassette is placed in the Carrier, the Carrier moves left until the Left End Switch Positioner closes the Left End Switch and the Carrier moves right to approximately space 8 or 9 and stops. The Shift Lock LED starts to flash and initialization stops. If the proper Ribbon Cassette is installed in the Carrier, the machine continues its normal initialization sequence.

F) The Element rotates slowly counterclockwise until the Left End Switch Positioner drops into the Element Home Notch on the Rear Scissors Gear under Spring Tension, which opens the Left End Switch, and the Element stops rotating.

Continued . . .

2) **Initialization (continued)**

G) The Carrier moves right approximately .300" to establish position "0," and then continues to the preset Left Margin (Space 12). The default settings are 10 pitch, with Left Margin at 12, and Right Margin at 72.

The Left End Switch is also used as a Lid Switch. Whenever the Deck is raised, the Lid Switch Actuator closes the Left End Switch through Spring tension. On Non-LCD Models, the Shift Lock LED flashes. On LCD Models, the Carrier moves to position 84 and the LCD displays "LID?-RIBBONS?." When the Deck is closed, the Switch opens, and the Carrier reinitializes and relocates to its previous position ready for typing.

3) **Keyboard**

The Keyboard is composed of Keybuttons mounted in a plastic housing along with individual leaf-type springs, molded Dome Conductive Switches, a Flexible Circuit PC Board, and a metal plate. When a Keybutton is depressed, the Keybutton contacts the leaf-type spring which in turn pushes down on a Molded Dome Conductive Switch. The Conductive Switch then comes into contact with the 7 x 8 matrix Flexible Circuit PC Board which now completes a circuit between a specific Column and Row. This completed circuit is then read by the Electronics of the Control PC Board which determines what Key was depressed. Refer to the appropriate Diagrams Section for Keyboard Layout and Keyboard Matrix Chart.

A) **Key Scanning:** The Electronics sequentially pulses Keyboard Rows R6, R5, R4, R0, R1, R2, R3, and R7 every 5ms. The Keyboard Matrix Columns C0 through C6 are sequentially read by the Electronics.

When a Keybutton is depressed, the Molded Dome Switch closes a circuit in the Keyboard Matrix so that when a pulse appears in that Keybutton's "R" Row, the pulse also appears in the Keybutton's "C" Column. The Electronics determines which Keybutton was depressed by comparing which "R" Row was pulsed at the point in time that the "C" Column became active. If the same "R" Row and "C" Column activity is detected through two scanning cycles, the Electronics interprets this as a valid Keybutton depression and activates the circuits to perform the appropriate function. If no Key is depressed, the electronics keeps all rows low to quickly identify a depressed key. After that Keybutton is identified, the electronics returns to sequentially pulsing the Keyboard Rows.

When any Keybutton is held down, the Electronics delays 500ms after performing a function to verify that a repeat is desired, and then activates the circuits to continue performing that function until the Keybutton is released.

B) **Shift Lock LED:** When the Shift Lock Keybutton is depressed, the Electronics recognizes the Key through the matrix as described above, and then energizes the LED. When either Shift Keybutton or Shift Lock Keybutton is subsequently depressed, the Electronics turns the LED off.

4A) ELECTRONICS (Non-LCD Models)

The Electronics consists of the components on the Control PC Board. The heart of the Control PC Board is Microcomputer U1. Its basic functions include the following:

A) Maintains control of the initialization process.
B) Determines and activates which Motors and Solenoids must be energized to perform the function, and when and for how long they must be energized.
C) Monitors Left End Switch/Lid Switch and Right Ribbon System Switch.
D) Sends the Keyboard Scanning pulses to the Keyboard, and interprets which Keybutton is depressed when a circuit is closed on the Keyboard.
E) Stores input characters in the Keyboard Input buffer and sends characters to the correction buffer.
F) Decides the type of function to perform, the upper or lower case character to be printed, the pitch selected for spacing, and (when required) the amount of vertical linespacing.
G) Reads the Country Selection Jumpers to determine which Keyboard and Printwheel is in use.

Other Major components on the Control PC Board include +5 & +18 VDC Power Supplies, Power Switch, and other Integrated Circuits.

ELECTRONIC BLOCK DIAGRAM

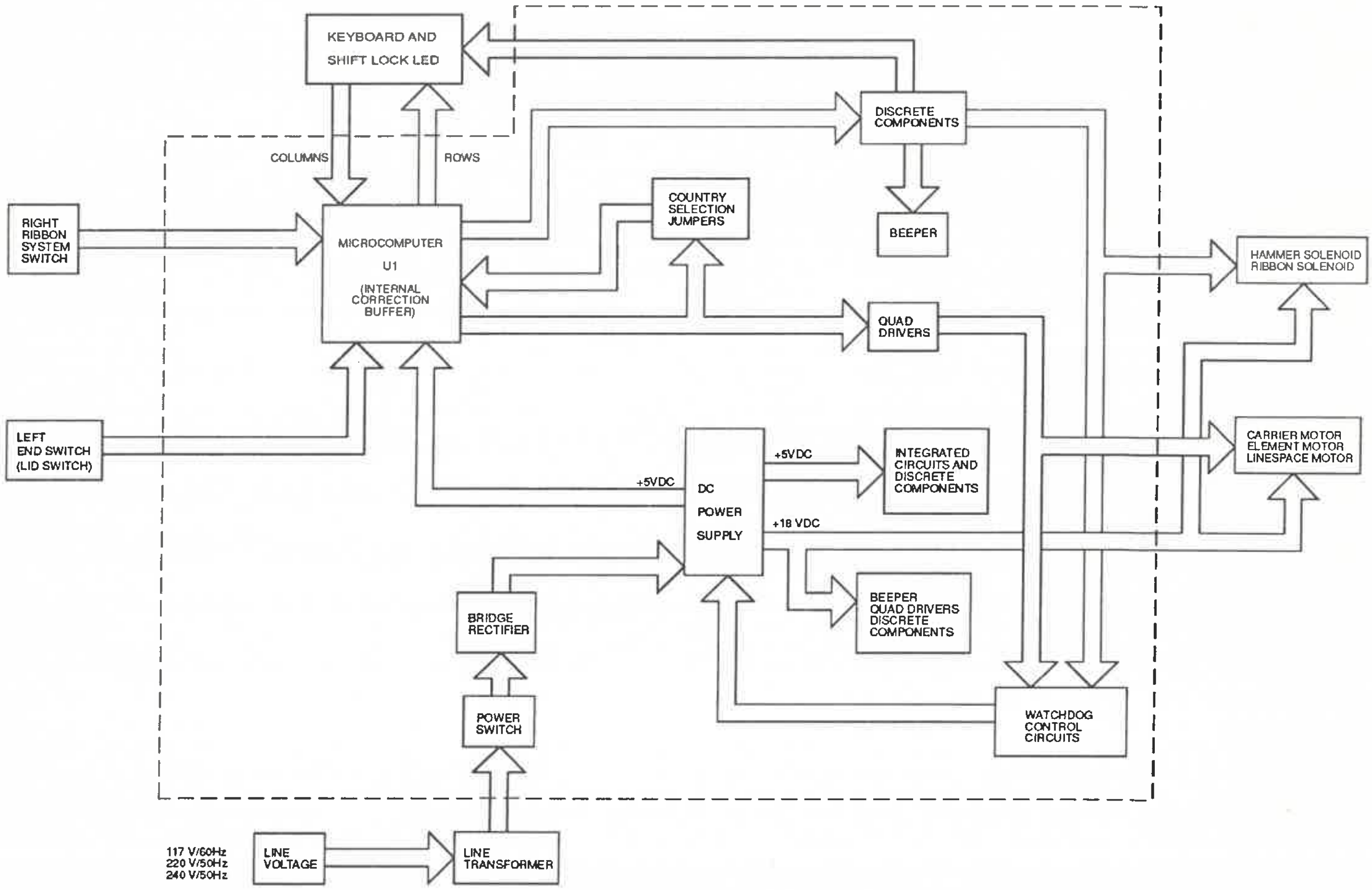

4B) Electronics (LCD Models)

The Electronics consists of the components on the Control PC Board. The heart of the Control PC Board consist of U1 Master Microcomputer, U2 Slave Microcomputer, 16 Character Liquid Crystal Display, 8 K Byte RAM, and a One Meg Rom. Their basic functions include the following:

A) Maintains control of the initialization process.
B) Determines and activates which Motors and Solenoids must be energized to perform the function, and when and for how long they must be energized.
C) Monitors Left End Switch/Lid Switch and Right Ribbon System Switch.
D) Sends the Keyboard Scanning pulses to the Keyboard, and interprets which Keybutton is depressed when a circuit is closed on the Keyboard.
E) Stores input characters in the Keyboard Input buffer and stores characters in the correction buffer.
F) Decides the type of function to perform, the upper or lower case character to be printed, the pitch selected for spacing, and (when required) the amount of vertical linespacing.
G) Checks words as they are typed against the dictionary (within the One or Two Meg ROM) for any misspellings. When a misspelling is detected, processes signals necessary for the functions of the dictionary.
H) Displays characters, operator prompts, and format options.
I) Stores up to 7 K Byte of information and text in RAM memory backed up by a battery.

Other Major Components on the Control PC Board include +5 & +18 VDC Power Supplies, On-Off and Type-Mem Switches, other Integrated Circuits, and Country Selection Jumpers.

ELECTRONIC BLOCK DIAGRAM

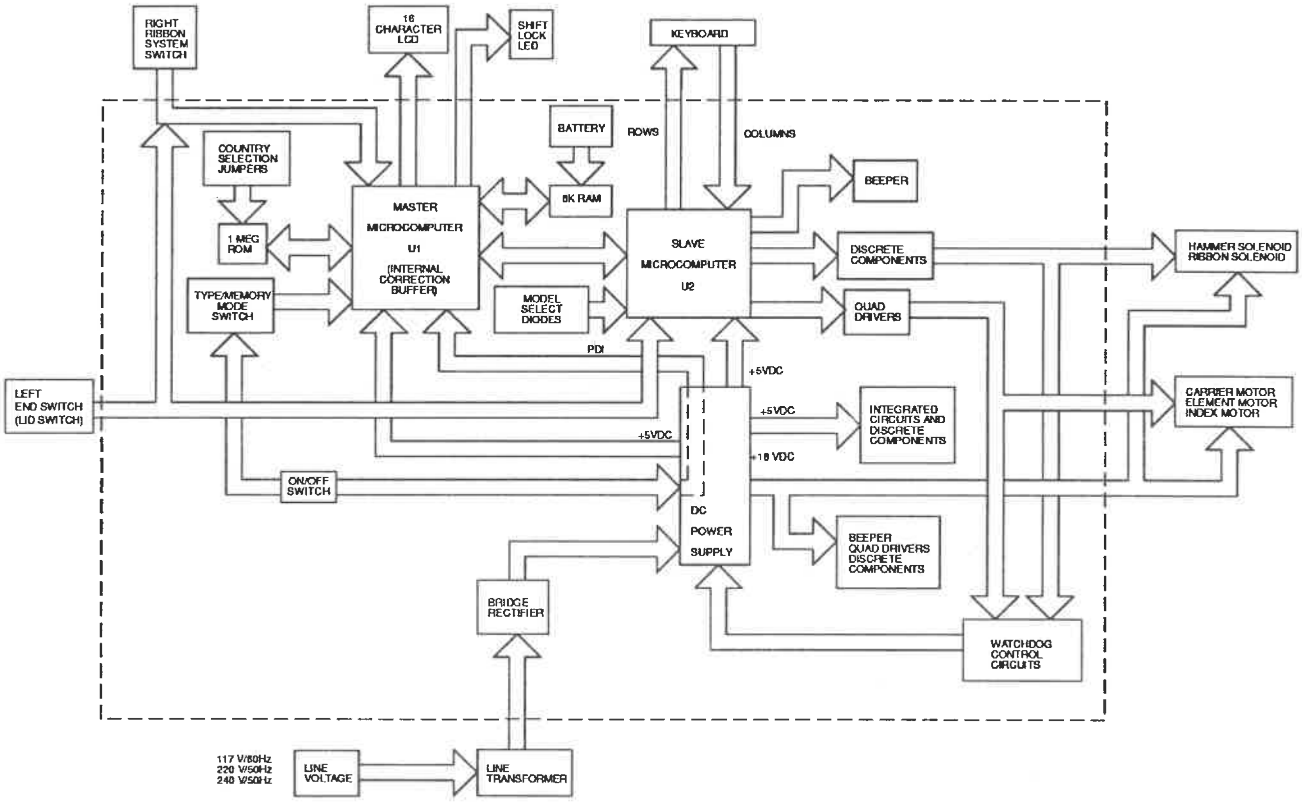

5) Stepper Motors

There are three unipolar, four phase, Permanent Magnet Stepper Motors in the machine--the Index, Carrier, and Element Motors.

A) Construction

Each Stepper Motor is made of a radially magnetized Rotor with alternating North and South Poles, and two Stator Sections, A and B.

The Stator Sections each have Bifilar coils wound around a plastic bobbin in the inside diameter of the Stator. When the two Stator Sections are assembled, the teeth of one section are aligned one half tooth away from similar teeth in the other section.

Opposite ends of the Bifilar coils are connected internally and brought out of the stator through a common lead wire. The other end of each coil can be switched to ground through the Electronics. Only one coil of each Bifilar pair is switched to ground at any given time. There are two Bifilar pairs in the stator. The windings in one pair are referred to as A and A', and the windings in the other pair are called B and B'. The direction of current flow is the same in windings A and B, which is opposite to the direction of current flow in A' and B'. The current flowing through the coil creates lines of magnetic flux which charge the Stator Teeth as either North or South Poles. The Stator is constructed so that adjacent teeth are opposite poles when current is flowing through the coil. When current flows in the opposite direction, the polarity of the Stator Teeth changes to attract and repel the poles on the Rotor. Sequentially changing the direction of current flow rotates the Rotor through magnetic attraction and repulsion.

B) Drive Strategy

The three Stepper Motors make use of different Run, Settle, and Hold voltage levels during operation which are regulated by the Electronics. A run level voltage is applied to the active halves of the coils to produce a strong magnetic field during operation. A settle level voltage is used as a transition voltage when one half of a coil is switched off and the other half switched on. The Carrier Motor also makes use of a third voltage level (Holding Voltage), when stationary, to keep the Carrier stable for printing. The Holding Voltage is drawn off the +18 VDC, and stays between +4 to +5 VDC.

Operating Voltages

Motor	Run Voltage	Settle Voltage	Holding Voltage
Carrier	+18 VDC	+18 VDC	+5 VDC
Element	+18 VDC	+18 VDC	None
Index	+18 VDC	+18 VDC	None

As the Motor Phases change the lines of magnetic flux, the Permanent Magnet Rotor rotates through magnetic attraction and repulsion. The Electronics reverses the phase sequence for reverse Rotor rotation.

Note: The terms "Phase 1," "Phase 2," etc., are used for description purposes only. The actual starting phase for any motor move is dependent upon where the motor stopped in its previous move, and on the programming in the Electronics. All subsequent motor steps follow the normal sequence. The starting phase for the Carrier Motor is dependent upon the pitch selected and the actuation point of the Left End Switch.

5) Stepper Motors (continued)

C) Step Angles

The Stator Teeth and magnetic Rotor Poles of each motor are arranged so that each successive Phase that is energized rotates the Rotor the same number of degrees. The step angle for all Motors is 7.5°, which means there are 48 full steps per revolution. The number of phases that are energized to perform any particular function is dependent on the nature of the function.

STEPPER MOTOR TIMING CHART

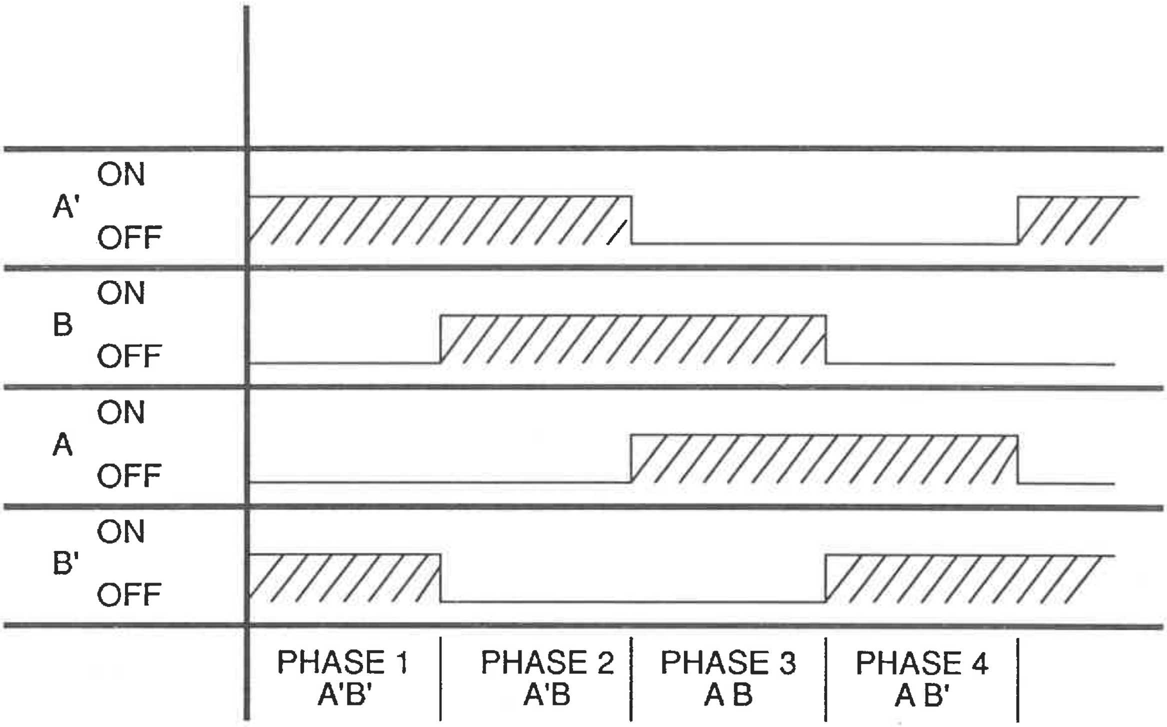

6) Carrier Drive

The Carrier Motor is mounted on the rear of the Carrier Molding. Driven by the Electronics, the Carrier Motor rotates clockwise and counterclockwise to move the Carrier left and right along the Carrier Rails for printing, correction, and spacing functions.

There is a 12 tooth Drive Gear permanently attached to the Carrier Motor Rotor Shaft. This Gear meshes with a one piece Carrier Drive Rack which mounts above the Carrier Drive Gear. The Carrier Drive Gear is under tension by a Spring and Anti-Backlash slider that pushes down on the Carrier Drive Rack. This spring tension reduces Gear backlash and maintains a constant mesh between the Carrier Drive Rack and Gear.

7) **Element Drive**

The Element Motor is mounted on the rear of the Carrier Molding. Driven by the Electronics, the Element Motor rotates clockwise and counterclockwise to place the desired character on the Print Element in line with the Hammer for printing and correction.

There is a 48 tooth Drive Gear permanently attached to the Element Rotor Shaft. This Drive Gear is in mesh with a 96 tooth, two piece Element Scissors Gear. The front half of the Element Scissors Gear is pressed onto the Element Drive Shaft, so that when the Element Motor rotates clockwise and counterclockwise the Element Drive Disc rotates also.

The Left End Switch Positioner is mounted on the rear cross frame of the Frame Assembly. During initialization, the Left End Switch Positioner tooth contacts the ridge on the Rear Scissors Gear. When the Element Motor rotates counterclockwise, the Positioner Tooth drops into the Notch in the Gear Ridge to stop the Element at Home Position.

The Element Drive Disc has two rectangular holes and one round hole which are keyed to fit the Print Element. When a Print Element is inserted, and the Hammer Assembly is pivoted rearward against the Element, the Element Pusher (mounted in the Hammer Solenoid Bracket) pushes the Element against the Drive Disc. During initialization, the Element rotates quickly clockwise to snap the Element into the keyed holes in the Element Drive Disc under tension of the Element Pusher. The keyed holes assure that the Home Character (e) is at Print Position when the Positioner Tooth is engaged in the Notch on the Rear Scissors Gear.

Element Home Position is established during initialization. If a new Print Element is inserted after initialization, opening and closing the Lid reinitializes the machine to reestablish Home position.

The Electronics is programmed to select the shortest distance to the next printable character on the Element whether printing from the Buffer or starting at Home Position.

8) **Print Hammer**

The Print Hammer is pivotally attached to the Hammer Assembly Bracket, and rests on the Hammer Solenoid Plunger under spring tension. When the Electronics energizes the Hammer Solenoid for printing, the Solenoid Plunger moves upward to pivot the Hammer top rearward to strike the Print Element Petal in its path against the Platen. When the Hammer Solenoid is de-energized, the Hammer returns to rest under spring tension.

The Electronics is programmed to energize the Hammer Solenoid for longer or shorter periods of time to provide stronger or weaker impression for individual characters. For broad faced characters (W, M, etc.), the Electronics energizes the Solenoid for a longer period of time than for small faced characters (., _, etc.). There are various time periods programmed in the Electronics to provide equal impression among all characters in any pitch.

9) Ribbon Cassette Feed/Correction Cassette Lift & Feed

The Ribbon Cassette Feed and Correction Cassette Lift & Feed are both driven by the same mechanism. This mechanism has one Solenoid which is energized every Ribbon Cassette or Correction Cassette cycle. A latching system, controlled by the energizing of the Print Hammer Solenoid, triggers either a Ribbon Cassette Feed or a Correction Cassette Lift and Feed. The normal position of this latch mechanism is Correction Cassette Lift and Feed.

The Electronics determines from the Keybutton depressed whether the feed should be Ribbon Cassette or Correction Cassette. A brief sequence for each action follows:

A) **Ribbon Cassette** - the Element rotates to the selected character; the Hammer fires to print the character and trip the Ribbon mechanism for a Ribbon Cassette Feed; the Ribbon Solenoid energizes to feed the Ribbon Cassette; the Carrier moves right one space (see Print Cycle Chart below).

Notes: 1) When the Ribbon Solenoid is de-energized, the Ribbon mechanism returns to the Correction Cassette Lift and Feed position.
2) The Ribbon advance during a Ribbon Cassette cycle is for the next printable character.

B) **Correction Cassette Lift & Feed** - the Carrier moves left or right to the character location; the Element rotates to the selected character; the Ribbon Solenoid energizes to lift the Correction Cassette Ribbon, and advance the Take-up Feed Pawl; and the Hammer fires to transfer the character to the Correction Ribbon. The Ribbon Solenoid de-energizes, allowing the Correction Bail to drop to its normal position which feeds the Correction Ribbon and returns the Ribbon mechanism to the Correction Cassette Lift and Feed position.

PRINT CYCLE -- SINGLE CHARACTER (10 PITCH)

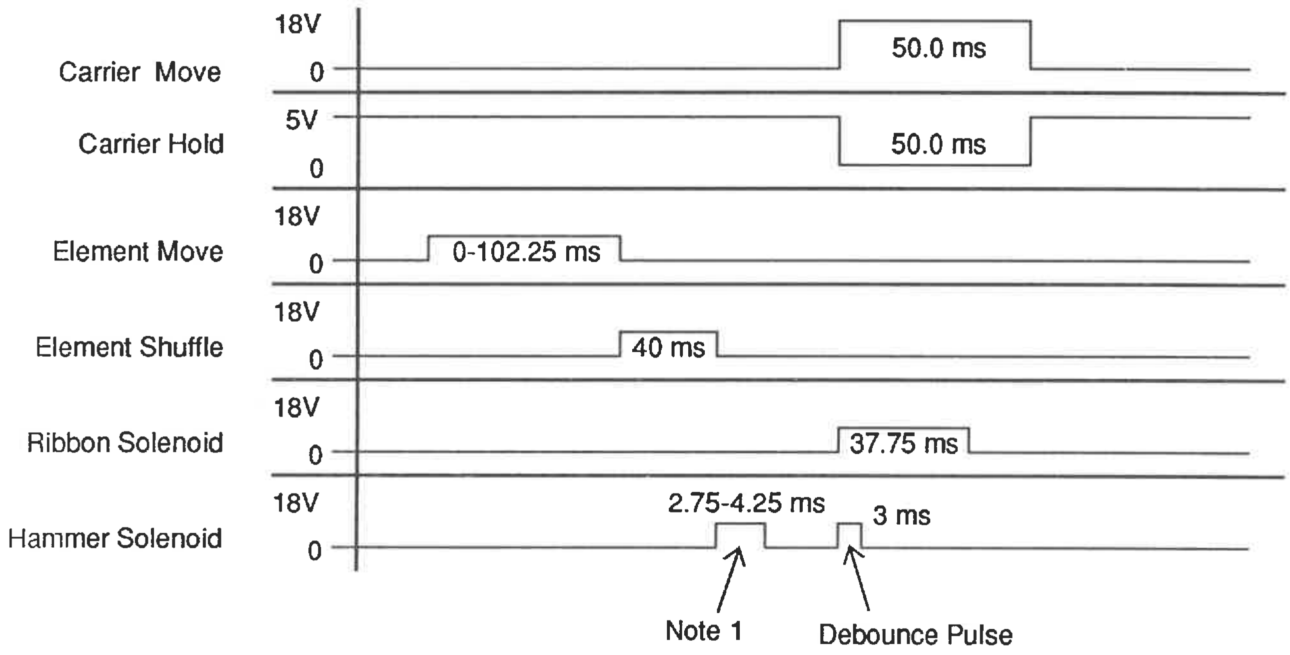

10) Ribbon Cassette Feed Mechanism

When latched for Ribbon Cassette feed, the Ribbon Cassette Feed mechanism feeds Ribbon when the Ribbon Solenoid is energized. The top of the Ribbon Driver seats in the Drive Gear in the Ribbon Cassette. The bottom of the Ribbon Driver seats into the Ribbon Ratchet Hub which in turn fits over the Ribbon Feed Shaft. On the bottom of Ribbon Feed Shaft is an Anti Backup Feed Spring which allows the Feed Shaft to rotate only in one direction.

After printing the previous character, the Ribbon Solenoid energizes and pulls the pawl of the Ribbon Feed Assembly in the teeth of the Ribbon Drive Ratchet Hub. This action rotates the Ribbon Feed Shaft, which rotates the Ribbon Driver approximately 30° for each printable character. The Ribbon Cassette is now positioned for the next printable character.

11) Correction Cassette Lift & Feed Mechanism

When the Ribbon mechanism is in its normal position, it is ready for a Correction Cassette Lift and Feed cycle. As the Ribbon Solenoid plunger is pulled into the Solenoid, the bottom of the Correction Bellcrank is pulled forward, moving the top tail upward, which causes the Correction Bail to lift upward. As the Bail raises, the Correction Ribbon Feed Pawl ratchets over approximately five teeth of the Take-up Ribbon Hub Ratchet. When the Ribbon Solenoid Plunger is released, spring tension on the Bail returns all parts to rest. As the Bail lowers, the Feed Pawl advances approximately five teeth of the Take-up Ribbon Hub Ratchet to rotate the Supply Feed Ribbon Hub Ratchet approximately five teeth past the Holding Pawl to feed the Correction Ribbon by one character position.

12) Right Ribbon System

The purpose of the Right Ribbon System is to alert you of an attempt to install a mismatched set of Ribbon and Correction Cassettes. For example: "Correctable" Film Ribbon with "Cover-Up" Correction Cassette is a mismatch. If a mismatched set is inserted, the Ribbon Cassette will not fit properly into the typewriter. Also, the Shift Lock LED flashes or "LID?-RIBBONS?" is displayed in the LCD when the Deck of the typewriter is closed.

The Right Ribbon System allows the typewriter to operate with a Ribbon Cassette only, but not with a Correction Cassette only.

The Right Ribbon System consists of a Right Ribbon Switch, Correction Cassette mechanism, Keyed Correction Cassette, and Keyed Ribbon Cassette. When the proper match between the Correction and Ribbon Cassettes exist, the Right Ribbon Switch is actuated (opened) by a tab on the Ribbon Cassette. With the Switch actuated, the Electronics on the Control PC Board is satisfied that a proper match exist between print and Correction Ribbons and allows the typewriter to function.

13) Paper Feed

Driven by the Electronics, the Index Motor rotates clockwise and counterclockwise to drive the Platen for Paper Feed.

On the Index Motor is a 12 tooth Drive Gear that is permanently attached to the Index Motor Rotor Shaft. This Gear is in mesh with a Pinion Face Gear. The Pinion Face Gear has a smaller gear that meshes with a large gear of the Linespace Pinion Assembly. The Linespace Pinion Assembly has a small gear that is in mesh with the Gear surface of the Platen Knob Assembly. The Platen Knob is mechanically attached to the Platen. This series of gears provide the correct gear speed and torque to provide proper rotation of the platen.

When the Carrier Return Keybutton or appropriate Code function is depressed, the Electronics energizes the Index Motor to rotate the Platen the number of linespaces as determined by the operator's linespace selection (1, $1^1/_2$, or 2).

The Paper Release Lever holds the Paper Table so that Front and Rear Feed Rollers are against the bottom of the Platen to provide Paper Feed through friction when the Platen rotates. When the Paper Release Lever is pulled forward, the Paper Table drops slightly to remove the Feed Roller tension, which allows the operator to straighten a sheet of paper before printing.

SECTION 3

LUBRICATION & CLEANING

INDEX

Subject	**Page Number**
General Lubrication Procedure	3-1
Cleaning Procedures	3-2
Lubrication Points	3-3

GENERAL LUBRICATION PROCEDURE

The main illustration points for Electronic Typewriters are illustrated and listed beginning on page 3-3. Each lubrication point is indicated with an arrow and a reference number, which indicates the lubricant used at that point. The following lubricants are required:

Reference Number	**Description**	**Part Number**
1	Dow #200 Silicone	250254
2	VW-1222 Grease	250299
3	Mobil FM2 Grease	250500
4	Anderol 465	250289
5	Dow #111 Silicone	250290
6	Never-Seez Grease	250293
7	Nyogel	250262

Important: *The Control PC Board and Transformer should be kept free of dirt, grease, and oil.*

CLEANING PROCEDURES

Cleaning procedures for machine parts and recommended cleaning solutions are outlined below.

Do not, under any circumstances, use an air hose or chemical cleaner to clean an Electronic Typewriter. Debris and chemical residue can impair the function of electrical components. If an internal part requires cleaning, wipe that part clean with clean, dry cloth.

Caution: When cleaning with recommended cleaning solutions, Take care that no liquid drips or splashes onto internal parts. Keep all solvents and petroleum distillates away from electrical components.

Platen

Remove Platen (see Removals). Soak a clean cloth with rubbing alcohol, and wipe the Platen surface to remove dust, dirt, and ink. Note: If the Platen is not removed, **do not** use alcohol: use a household cleaner such as Windex.

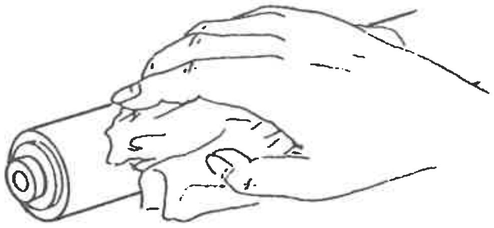

Print Element

Dip the Print Element Petals into a container of rubbing alcohol, and wipe dry with a clean cloth.

Do not soak the Print Element in the alcohol.

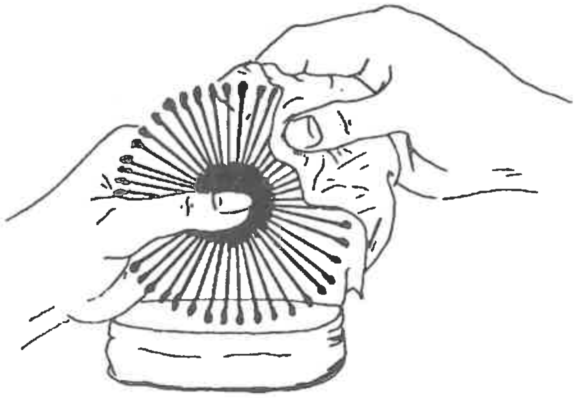

Jackets

Remove Jackets and wipe clean with a sponge soaked in a mild ammonia or soap solution.

Do not use any cleaning solutions which contain chlorinated compounds.

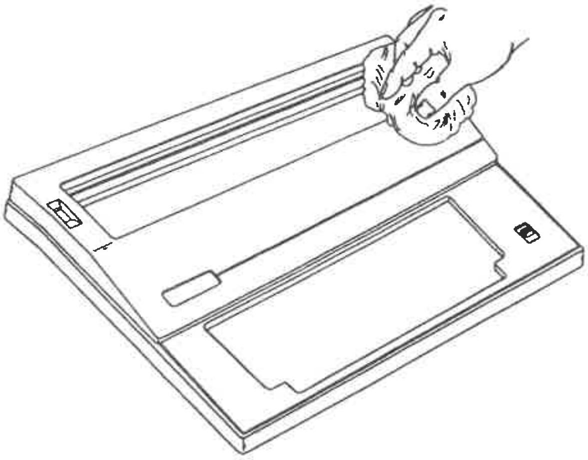

LUBRICATION POINTS

CARRIER RAILS

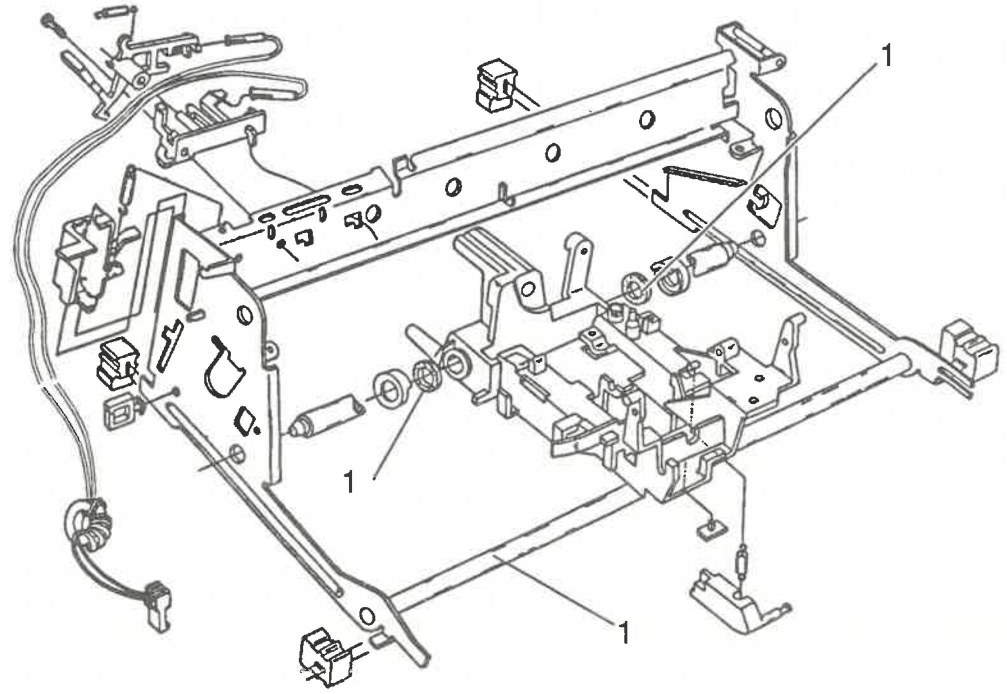

ELEMENT DRIVE

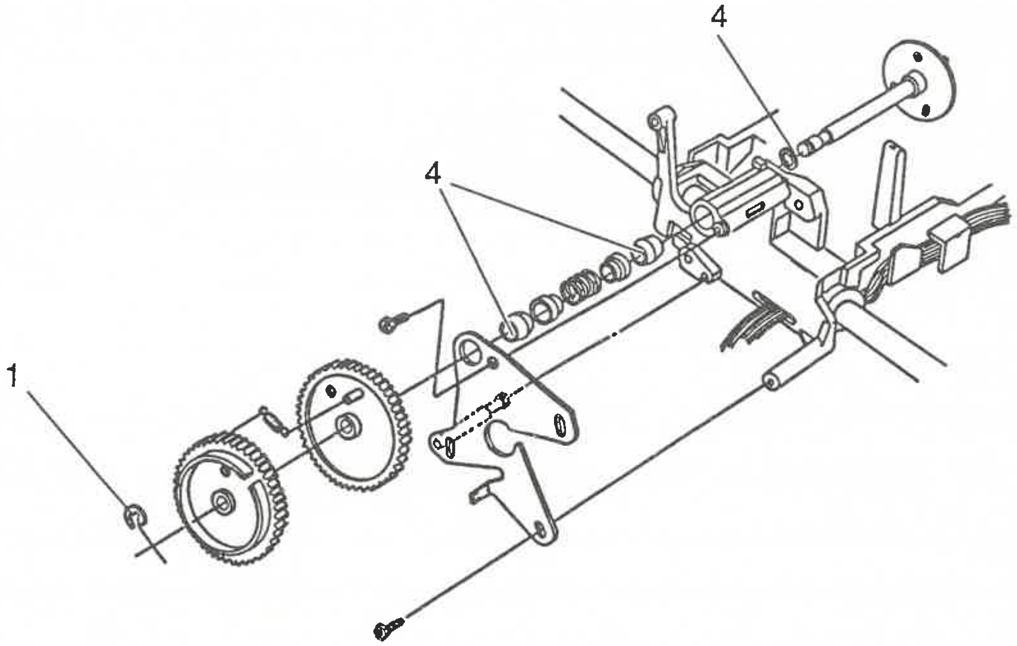

REF	DESCRIPTION	REF	DESCRIPTION
1	Dow #200 Silicone	4	Anderol 465
2	VW-1222 Grease	5	Dow #111 Silicone
3	Mobil FM2 Grease	6	Never-Seez Grease
		7	Nyogel

LUBRICATION POINTS

PAPER FEED

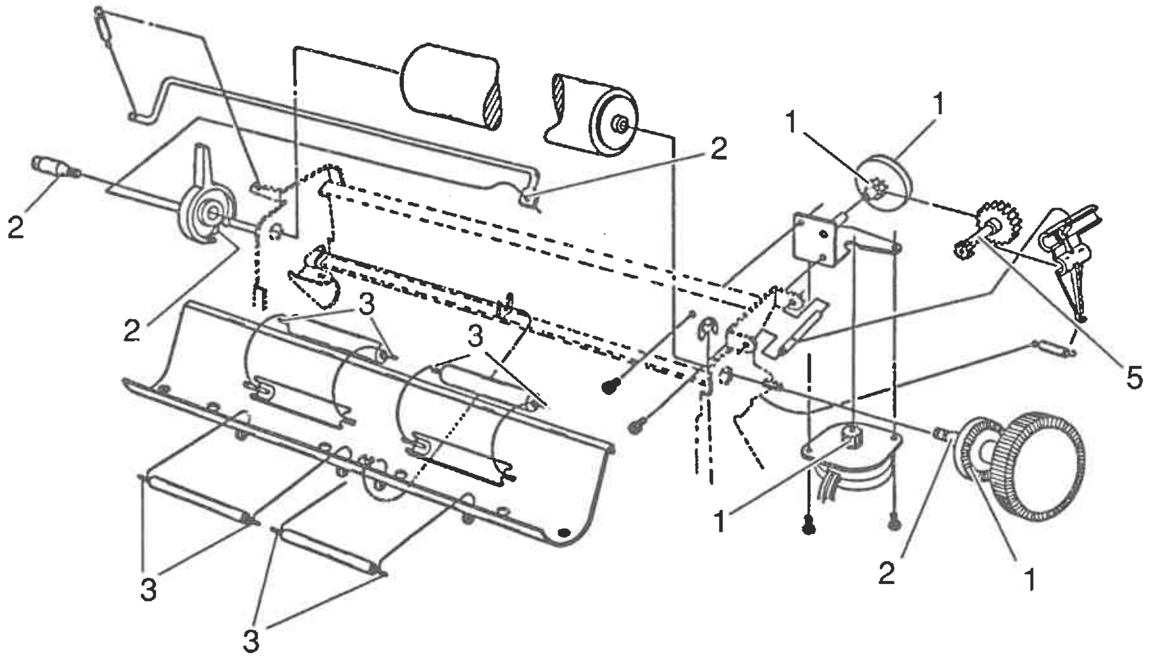

RIBBON DRIVE

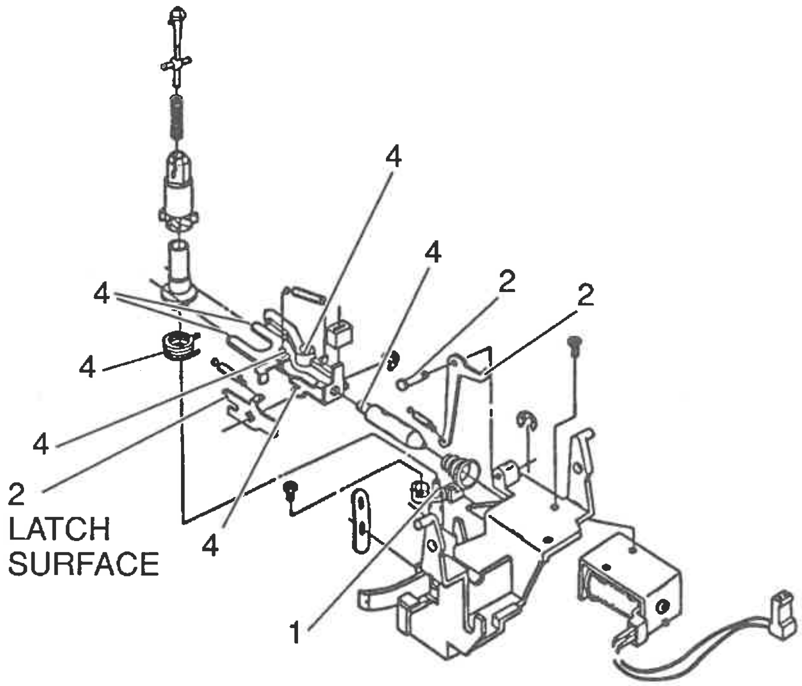

REF	DESCRIPTION	REF	DESCRIPTION
1	Dow #200 Silicone	4	Anderol 465
2	VW-1222 Grease	5	Dow #111 Silicone
3	Mobil FM2 Grease	6	Never-Seez Grease
		7	Nyogel

LUBRICATION POINTS

HAMMER

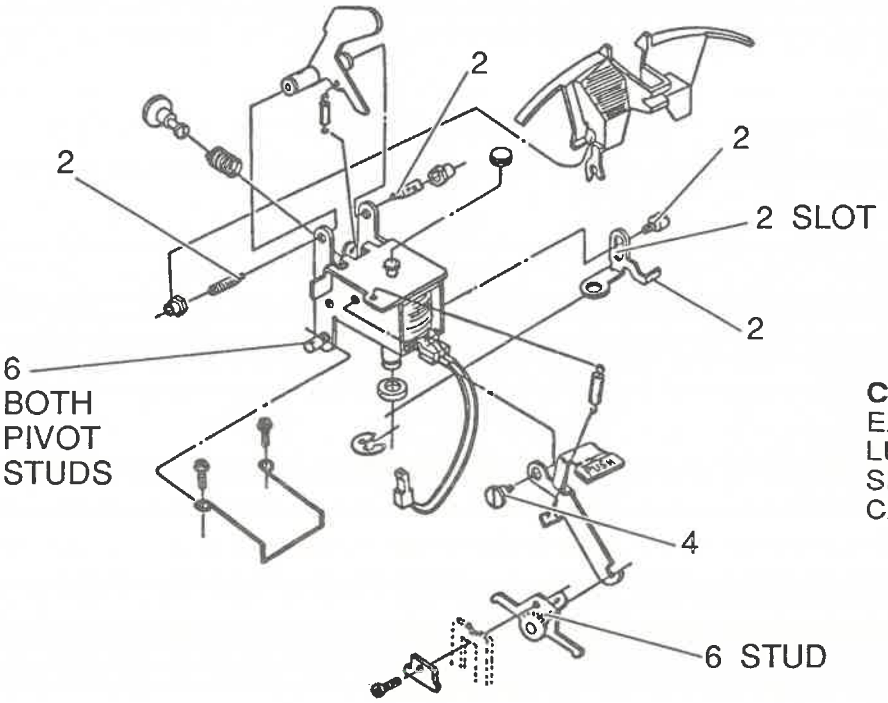

CAUTION:
EXCESSIVE LUBE WILL SPLATTER IN CASING BASE

KEYBOARD

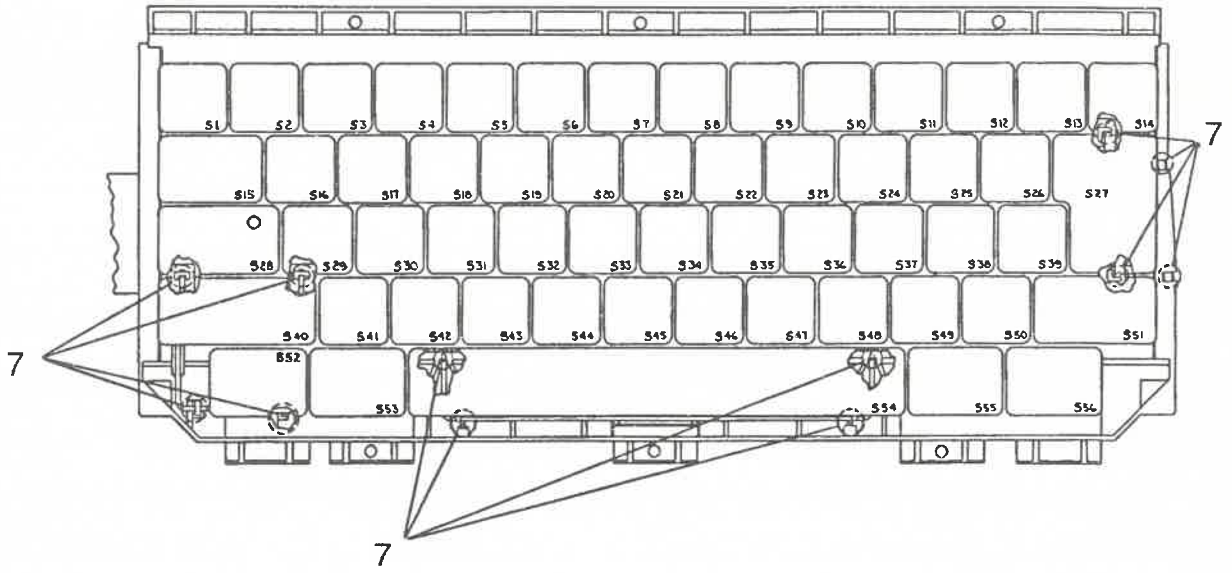

REF	DESCRIPTION	REF	DESCRIPTION
1	Dow #200 Silicone	4	Anderol 465
2	VW-1222 Grease	5	Dow #111 Silicone
3	Mobil FM2 Grease	6	Never-Seez Grease
		7	Nyogel

SECTION 4

REMOVALS

General Procedure: All removals should be performed with power cord unplugged and machine at rest. Prior removal of particular groups of parts is indicated in each removal procedure as required.

When adjustments are broken during a removal, those adjustments are indicated at the bottom of the procedure, and are referenced to adjustment numbers in the Adjustment Section. Refer to the Branch Display on page 5-1 for sequential relationships among adjustments.

OBSERVE STATIC PRECAUTIONS

Removals of PC Boards and other static sensitive parts are marked as above. Be extremely careful when handling these parts as static electricity can cause irreparable damage to static sensitive devices. Refer to the reverse side of the Contents Page (page ii) for proper procedures to follow when handling static sensitive devices.

Removals Index

	Page Number
1. Mask Removal	4-3
2. Keyboard Removal	4-3
3. Keyboard Component Removals	4-4
4. Keyboard Keybutton Removals	4-4 thru 4-6
5. Control PC Board Removal	4-6
6. Frame Assembly Removal (with Carrier & Paper Handling)	4-7
7. Transformer Assembly Removal	4-8
8. Correction Bail Removal	4-8
9. Correction/Cassette Ribbon Solenoid Removal	4-9
10. Linespace Motor Removal	4-9
11. Ribbon Mechanism Removal	4-10
12. Hammer Solenoid Assembly Removal	4-11
13. Element Motor Removal	4-12
14. Element Drive Shaft and Bearings Removal	4-13
15. Platen and Paper Table Removal	4-14
16. Carrier Motor and Carrier Rack Drive Assembly Removal	4-15
17. Carrier Molding Removal	4-16

1. **Mask Removal**

   1. Remove four Screws (2). On LCD models, open Deck and reach under Mask to disconnect LCD Cable Connector (5) from LCD (6).

   2. Lift off Mask (3). Note: Rear of Deck (1) can be snapped off of Mask (3), and LCD (6) can be unscrewed from Mask.

   3. Remove Keyboard, Control PC Board, Frames, and Transformer Assembly (see Removals Index) to remove Casing Base (4).

   Replacement: Reverse procedure. On LCD Models, move Switch Actuator to the "Type" position before installing Mask to the Casing Base. On non-LCD Models, move Switch Actuator to the "Off" position. Position rear of Mask on Casing Base while holding front of Mask away from Base. Assemble two rear Screws (2), carefully place front of Mask on Base to prevent damaging Switch Contacts, and assemble two bottom Screws (2).

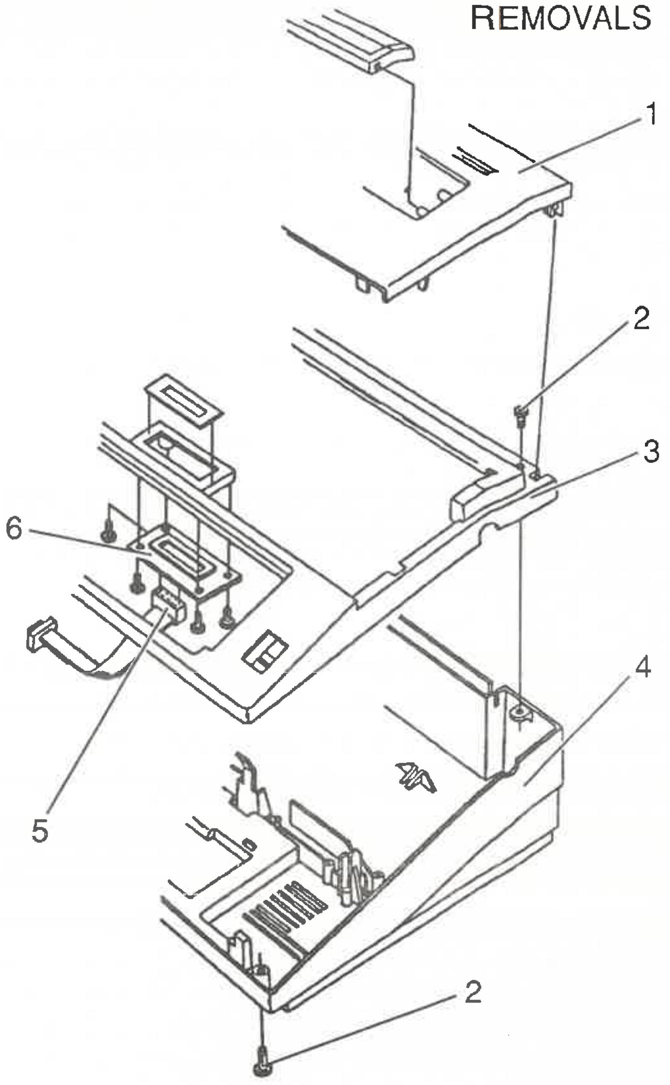

OBSERVE STATIC PRECAUTIONS

2. **Keyboard Removal**

   1. Remove Mask (see Mask Removal).

   2. Unsnap both rear corners of Keyboard (7) from Left and Right Posts (4-A).

   3. Lift Rear of Keyboard (7) up and slide Keyboard rearward from front Posts (4-B). Disconnect the Ground Cable (7-A) from Keyboard and disconnect the Keyboard Connector from Control PC Board (8). Remove Keyboard.

   Replacement: Reverse procedure.

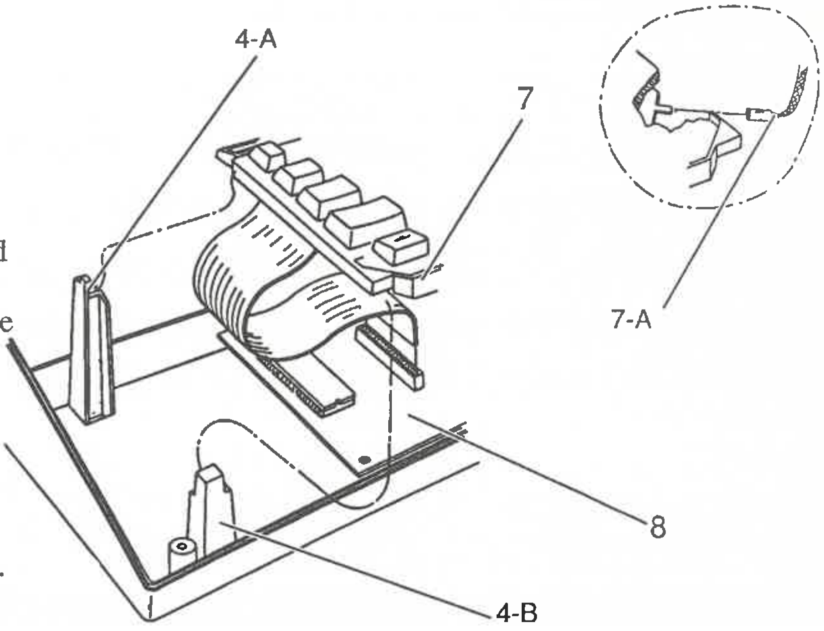

3. Keyboard Component Removals

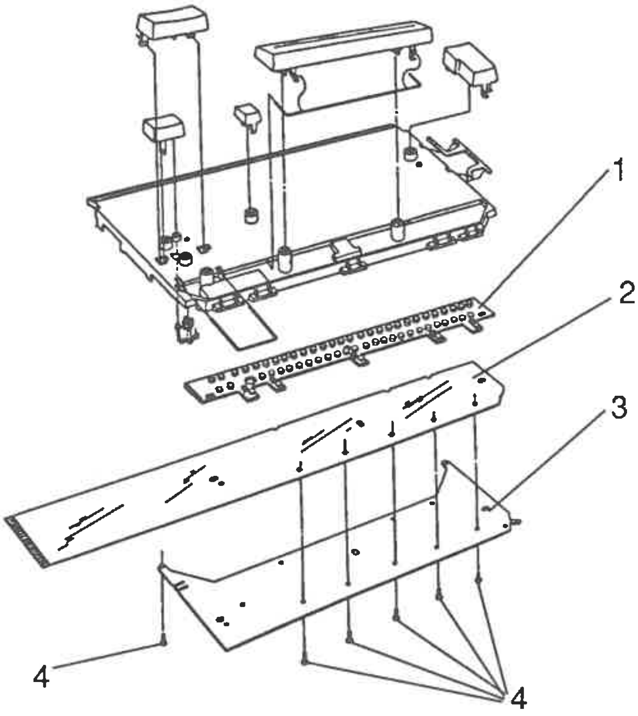

1. Remove Mask and Keyboard (see Removals Index).

2. With Keyboard upside down (Keybuttons facing down), remove Screws (4) and lift off Keyboard Base Plate (3).

3. Lift off Keyboard Flexible Circuit (2) and Molded Switches (1) from Keyboard.

4. Keybutton Removals: The Keybuttons on the Keyboard **cannot** be removed by prying up the Keybutton. See the following procedure.

Replacement: Reverse procedure.

Caution: Prying up on a Keybutton damages the Striker Spring. If a Striker Spring gets damaged, the entire keyboard must be replaced.

4. Keyboard Keybutton Removals

1. Remove the Keyboard from the Casing Base. Removal of the Keyboard Base Plate is not necessary, but the illustrations in this procedure show it removed.

2. When removing the Spacebar, Left Shift, or Return Keybutton, remove the Keybutton Bail next:

   A) For the Spacebar or Shift Keybutton, use a Spring Hook on the Wire Bail, and pull forward to disengage the Bail from the Keyboard and Keybutton.

   B) For the Return Keybutton, depress the Keybutton slightly; push gently forward on the Sheet Metal Bail, and pivot the Bail out of the Keyboard. *Be careful not to damage the locking post when pushing the bail forward.*

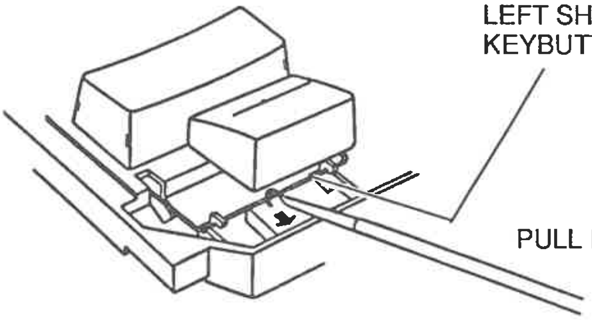

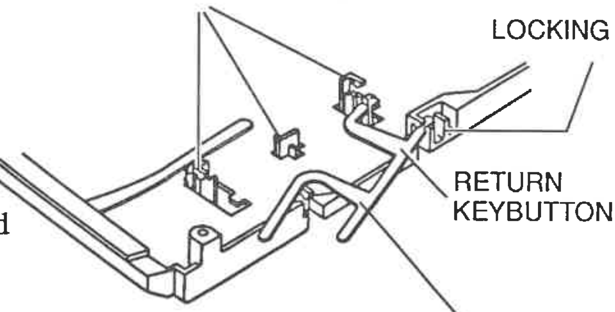

Continued . . .

4. Keyboard Keybutton Removals (continued)

3. Turn the Keyboard upside down, and use a Spring Hook to raise the Striker Spring slightly to disengage it from the Keybutton. ***Caution: Do not raise the striker spring too far or the spring will get damaged.*** While holding the Spring away from the Keybutton, use the Spring Hook to unsnap the Keybutton Lock Tab from the Keyboard. The Keybutton drops out of the Keyboard Assembly. Note: The Spacebar has *two* Lock Tabs.

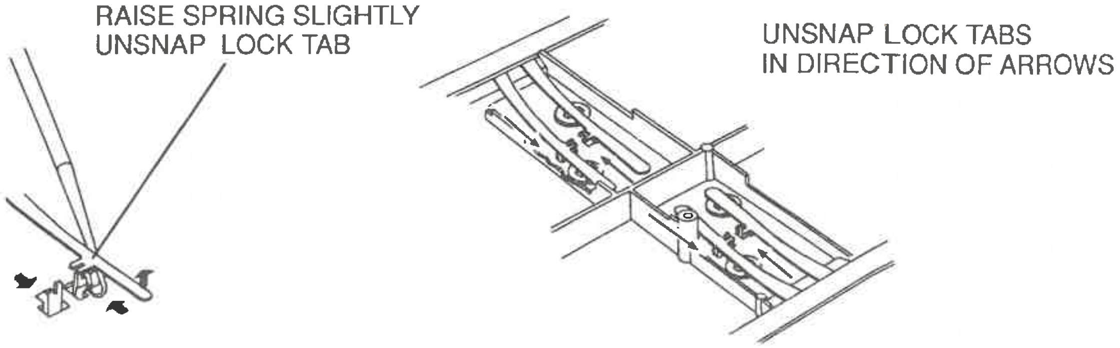

BOTTOM VIEW

Replacement:

A) Align the Keybutton with the holes in the Keyboard, and snap the Keybutton in place.

B) 1. When replacing the Spacebar or Left Shift Key Wire Bail, insert the Bail through the holes in the Keyboard. Make sure the ends of the Bail are properly aligned, and snap the front of the Bail into its locking tabs.

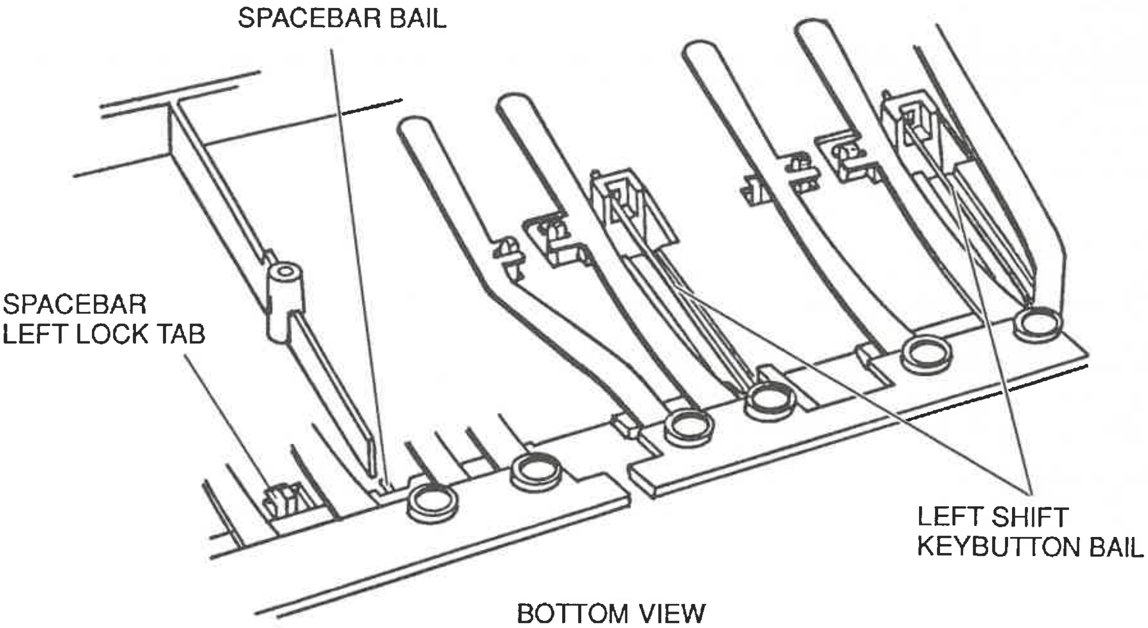

BOTTOM VIEW

Continued . . .

4. Keyboard Keybutton Removals

Replacement (continued):

B) 2. When replacing the Return Keybutton Sheet Metal Bail, depress the Keybutton slightly; gently push the end of the Bail slightly against the Keyboard post, and pivot the Bail into position. Make sure the Arms of the Bail seat in the Slots on the Keybutton.

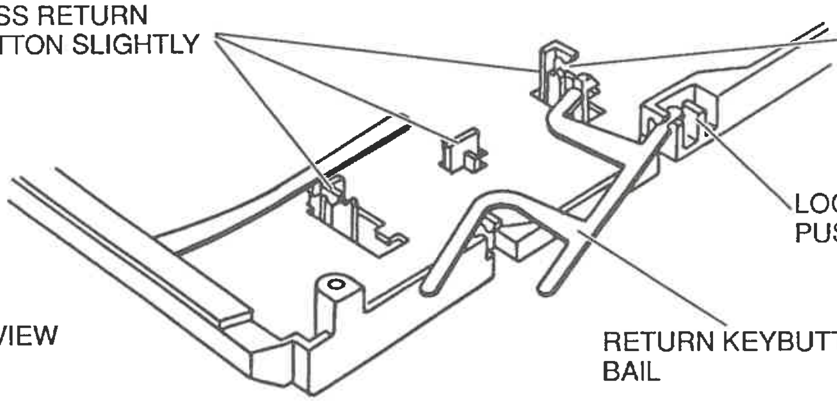

C) Replace the Keyboard in the Casing Base.

5. Control PC Board Removal

1. Remove Mask and Keyboard (see Removals Index).
2. Disconnect Ground Cable (3) from PC Board Connector.
3. Disconnect Left End Switch, Right Ribbon Switch, Ribbon Solenoid, Hammer Solenoid, Element Motor, Carrier Motor, Transformer, and Index Motor Connectors.
4. Remove Screws (1), and lift out Control PC Board (4).
5. On LCD Models, remove the LCD Cable (2), Insulator (5), and Shield (6).

Replacement: Reverse procedure. Make sure front of PC Board is under Lugs (7). Refer to Wiring Diagram for connections to PC Board.

OBSERVE STATIC PRECAUTIONS

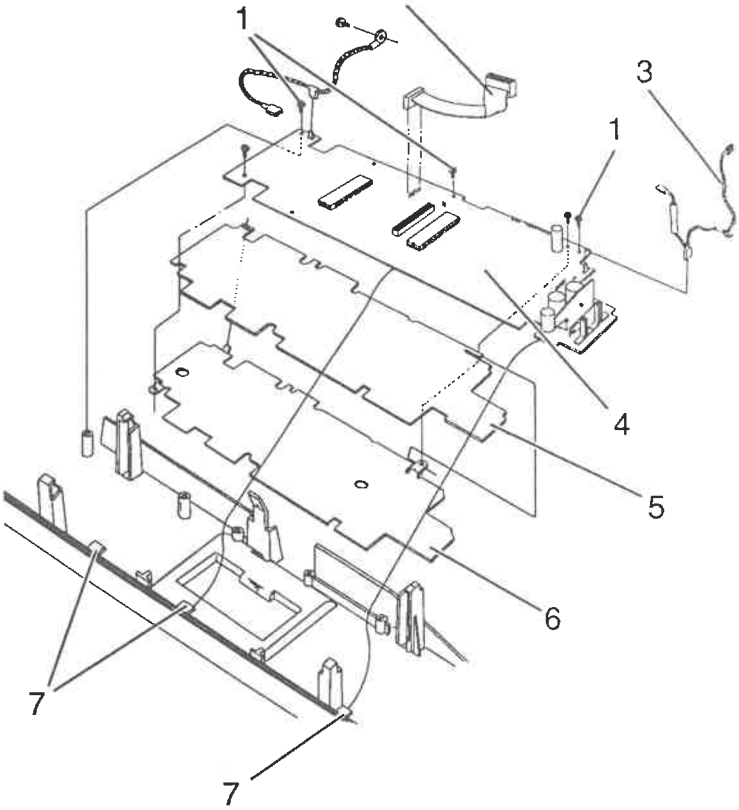

6. Frame Assembly Removal (with Carrier & Paper Handling)

1. Remove Mask and Keyboard (see Removals Index).
2. Remove two Screws (3) and two Foot Retainers (4) from Casing Base.
3. Disconnect Left End Switch, Right Ribbon Switch, Ribbon Solenoid, Hammer Solenoid, Element Motor, Carrier Motor, and Linespace Motor Connectors from Control PC Board.
4. Disconnect Ground Wire Connector (2) from Carrier Side Frame (1).
5. Remove Spiral Harness, Left End Switch, and Index Motor Wires from Casing Base.
6. Lift Frame Assembly (7) out of Casing Base (5). Note: This requires some force since the fit is tight. The two rear Feet (6) of the Frames can remain in the Casing Base.

Replacement: Reverse procedure. Secure the Left End Switch Wires in the Casing Base as illustrated below. Refer to Wiring Diagrams for connections to the PC Board.

OBSERVE STATIC PRECAUTIONS

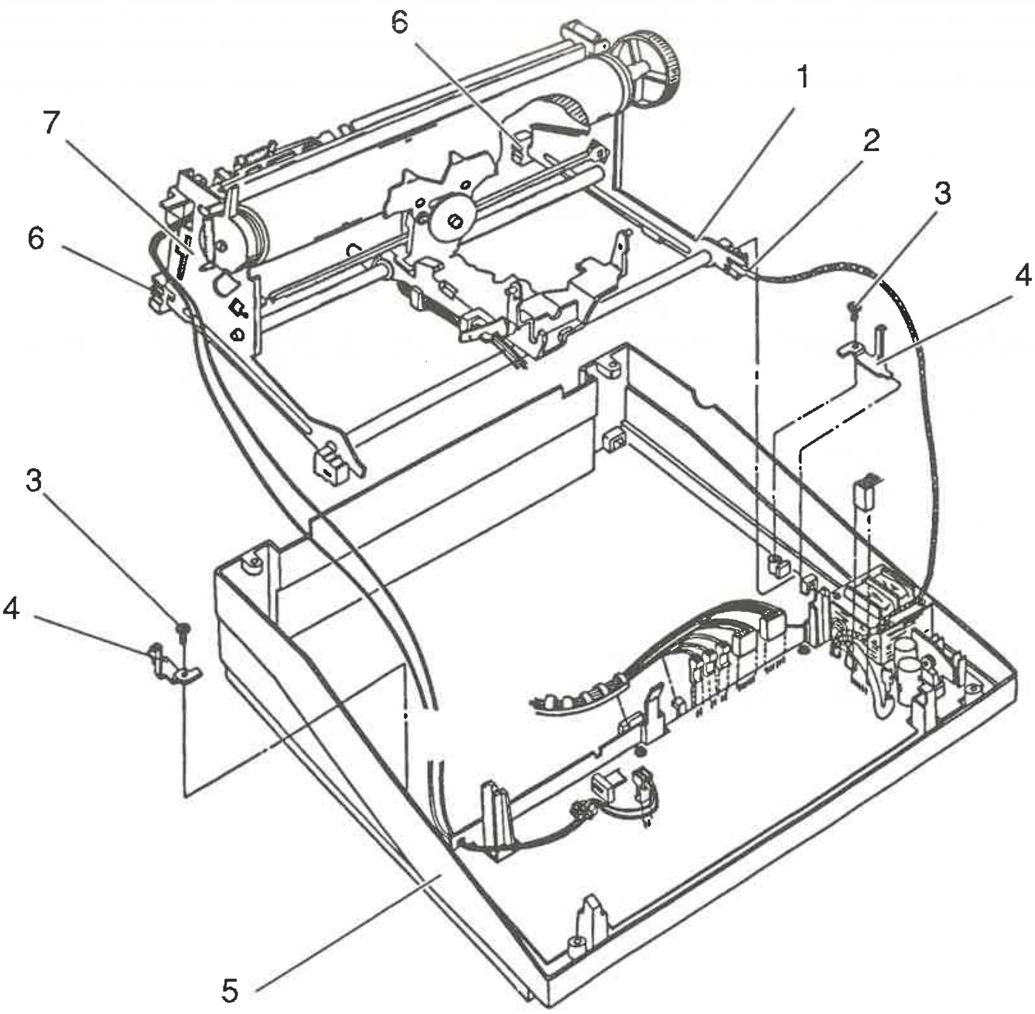

7. Transformer Assembly Removal

1. Remove Mask and Frame Assembly (see Removal Index).
2 Disconnect Connector (4) from Control PC Board.
3. Remove two Screws (1) from Transformer.
4. Remove Screw (2) from Ground Wire Ring Terminal (3). Remove Ground Wire from Transformer.
5. Lift out Line Cord Strain Relief (8) from Casing Base, and lift out Transformer Assembly.
6. On International Models only, disconnect two Connectors (6) to separate Line Cord (7) from Transformer Assembly (5).

Replacement: Reverse procedure. Note: Transformer base has Keyed Studs in Casing Base for easy locating.

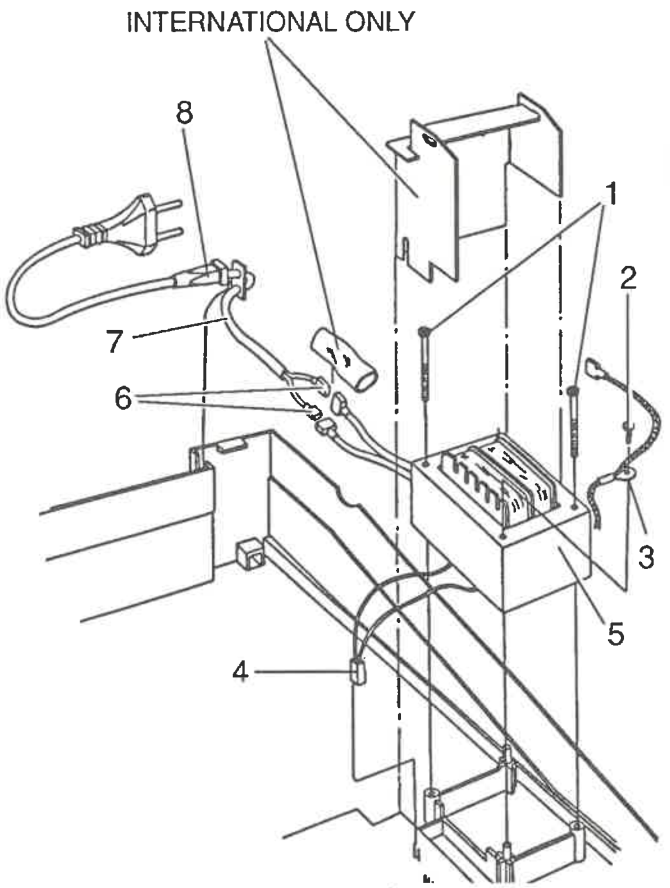

OBSERVE STATIC PRECAUTIONS

8. Correction Bail Removal

1. Remove Print Element, Ribbon Cassette, and Correction Cassette.
2. Unhook Spring (12) from Correction Bail.
3. Remove Correction Bail from Carrier by pushing out on Ribbon Cassette Pivot Mounts (11-A).
4. Remove Right Ribbon Switch wires from Slot (10-A) in Correction Bail.
5. Push Mount (9-A) on Right Ribbon Switch Lower Holder (9) towards center of Correction Bail and release from Bail.
6. Unhook Lower Switch Holder Spring (9-C) from Correction Bail. Rotate Lower Switch Holder so Holder is free from Correction Bail.
7. Disconnect Right Ribbon Switch Contact (9-B) from Upper Switch Holder. Lift out Correction Bail (10).

Replacement: Reverse procedure. Note: Make sure that Upstop Arm of Correction Bail is ***underneath*** Upstop Stud on Carrier.

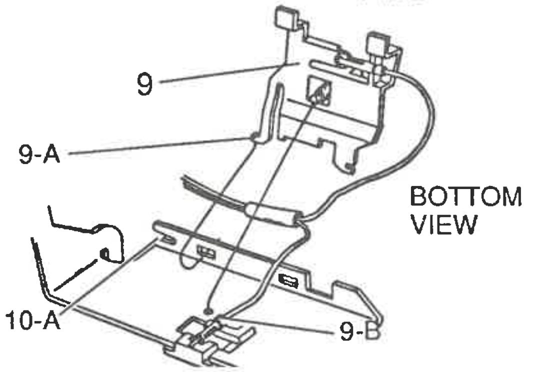

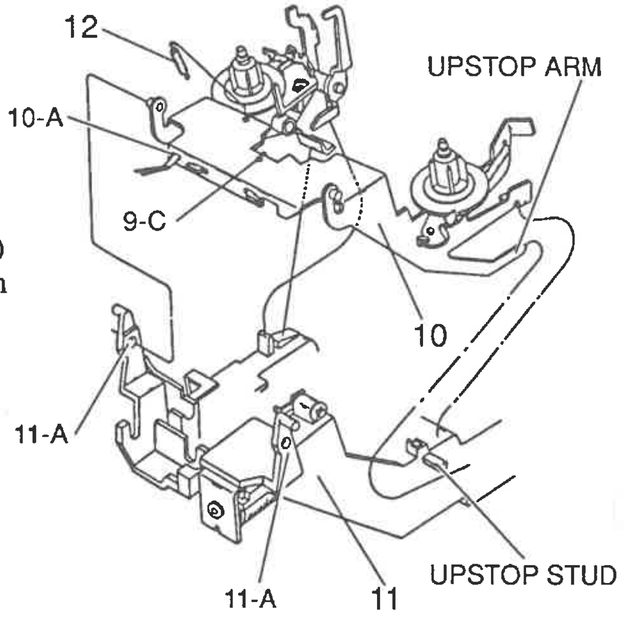

9. Correction/Cassette Ribbon Solenoid Removal

1. Remove Frame Assembly and Correction Bail (see Removals Index).
2. Unhook Spring (2) from Ribbon Solenoid (3).
3. Remove Screw (1) and lift out Solenoid.
4. Remove E-Ring (6) from Solenoid Plunger (5). Lift out Plunger (5) and Spring (4).

Replacement: Reverse procedure. Note: Make sure Solenoid Spring (4) is installed as shown in illustration.

Adjustments Broken: Correction Cassette Lift Adjustment (Adjustment #6).

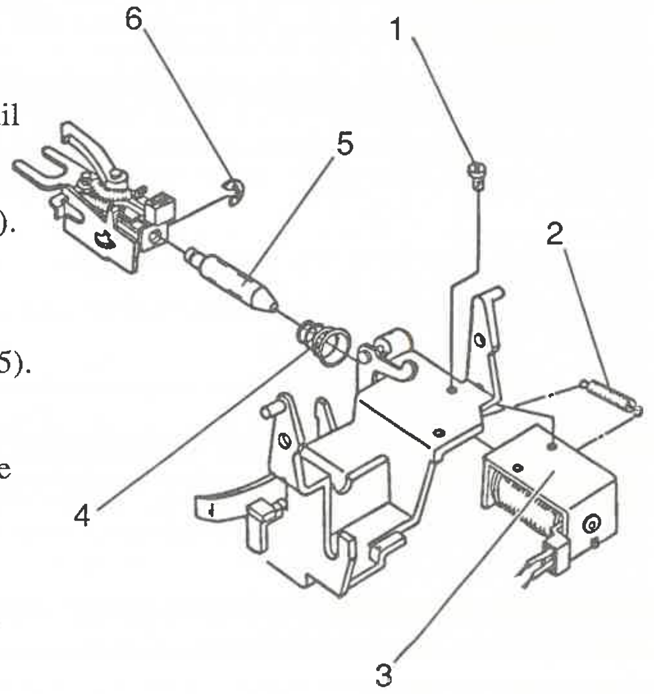

10. Linespace Motor Removal

1. Remove Mask and Frame Assembly (see Removals Index).
2. Remove two Screws (8) and lift out Linespace Motor (7).

Replacement: Reverse procedure. Note: Make sure Motor Gear meshes with Intermediate Gear.

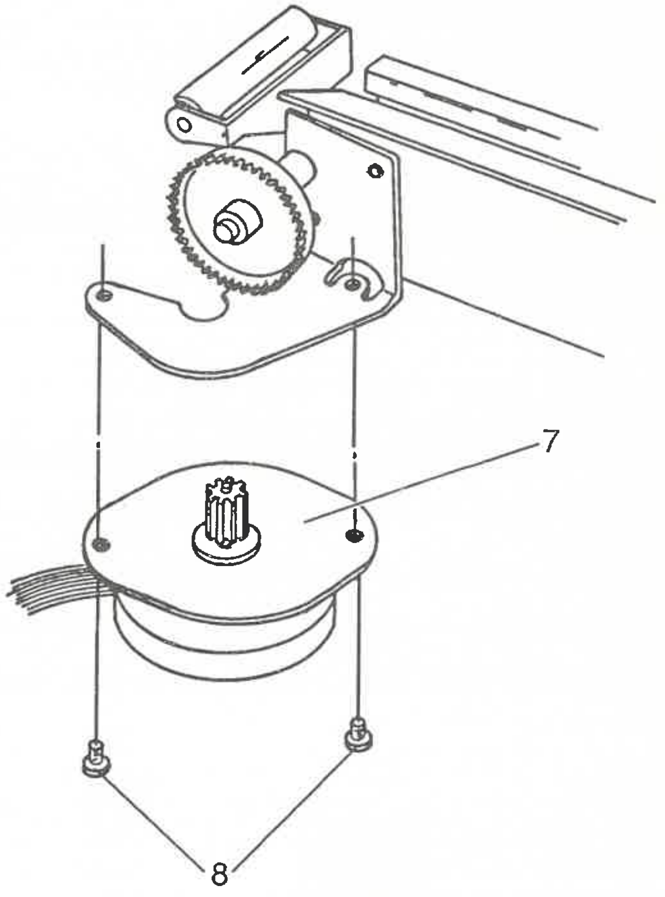

11. Ribbon Mechanism Removal

Note: Ribbon Driver (1) may be removed from Ribbon Driver Assembly with no other removals by pulling it straight up out of Assembly with a pair of Needle Nose Pliers. Spring (2) may fall free. Use Needle Nose Pliers to replace Ribbon Driver (1).

1. Remove Frame Assembly, Correction Bail, and Correction/Cassette Ribbon Solenoid (see Removals Index).
2. Remove Screw (10), E-Ring (8), Stud (6), and Correction Lift Bellcrank (7).
3. Lift out Ribbon Shaft Assembly from Carrier Molding (9).
4. Remove Ribbon Drive Ratchet Hub (3) from Ribbon Feed Shaft (4) by pulling apart.
5. Remove Anti-Backup Feed Spring (13) from Ribbon Feed Shaft (4).
6. Remove Ribbon Feed Spring (5) and Black Latch Spring (12) from Ribbon Feed Assembly (11).

Replacement: Reverse procedure. Note: Spring Tab (13-A) seats in molded Notch (9-A) in Carrier Molding (9). Also, make sure Solenoid Spring (14) is installed as shown in illustration.

Adjustments Broken: Correction Cassette Lift Adjustment (Adjustment #6).

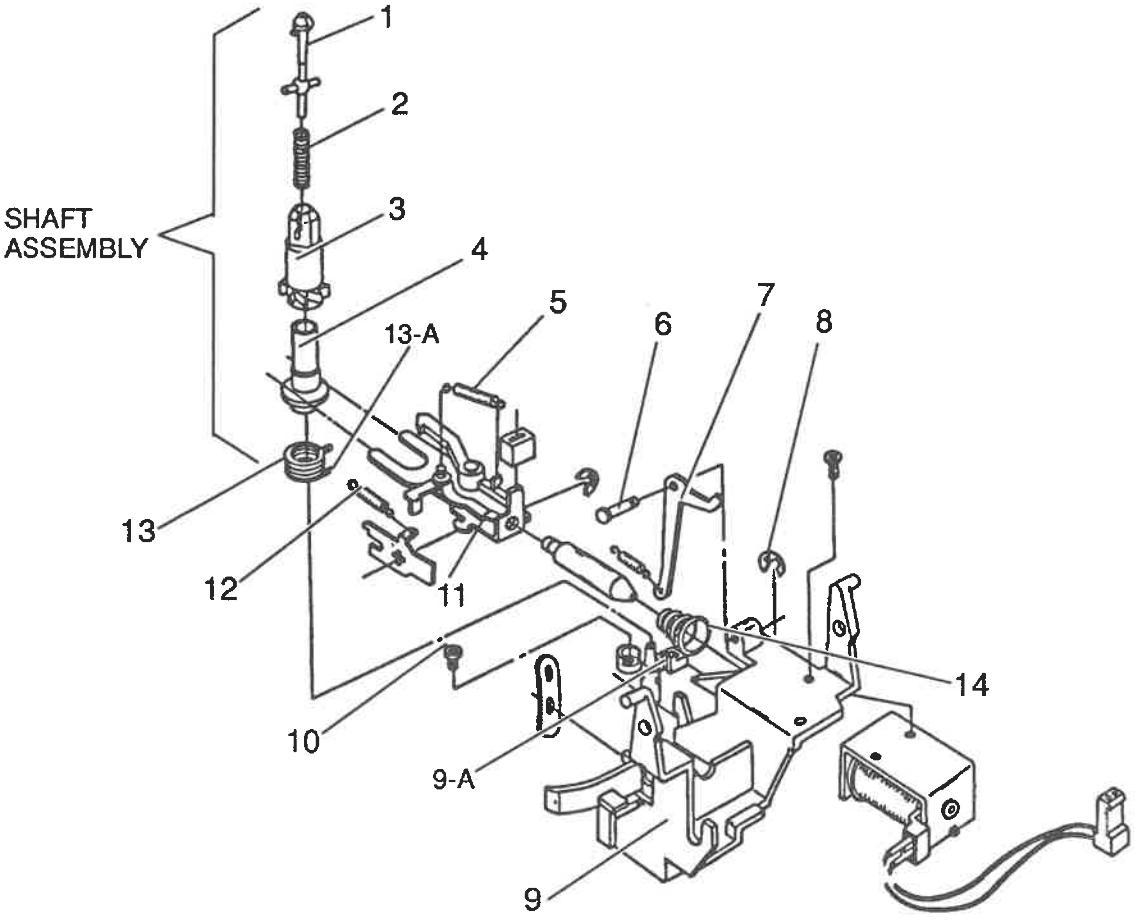

12. Hammer Solenoid Assembly Removal

1. Remove Correction Bail (see Removals Index).
2. Remove Ribbon Guide (1) from left and right Hammer Pivot Nuts (2) and Ear (5-A).
3. Unhook Wire Strap (7) from Carrier.
4. Remove two Screws (3) and Retaining Wire (11).
5. Press Push Lever (4) downward slightly, and lift Hammer Solenoid Assembly (5) out of Carrier.
6. Remove two Hammer Wires (9) from spiral Wire Binder Retainer (8).
7. Disconnect Hammer Solenoid Connector (10) from Control PC Board.

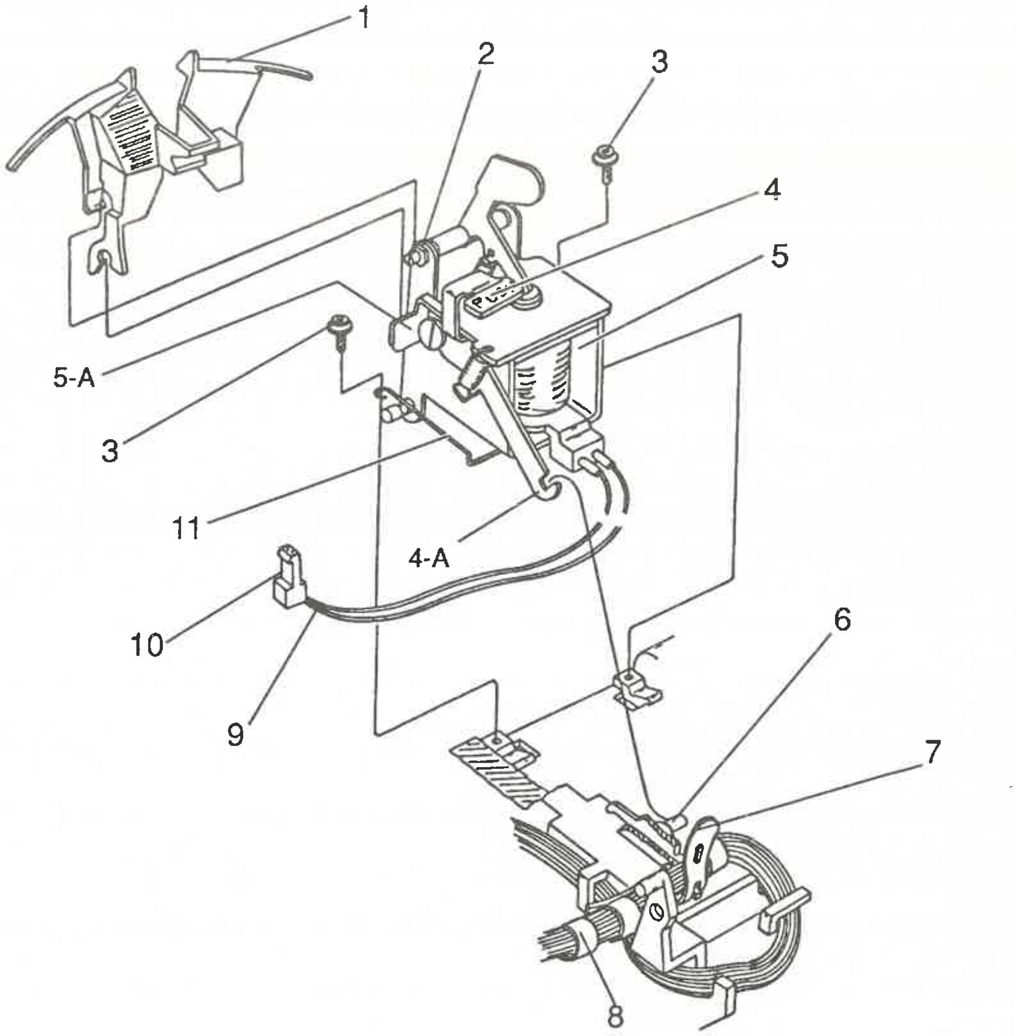

Replacement: Reverse procedure. Formed area of Retaining Wire fits under Lip of Carrier Molding, and Stud (6) fits in Slot (4-A).

13. Element Motor Removal

1. Remove Frame Assembly (see Frame Assembly Removal).
2. Remove two Screws (5) and two Washers (4).
3. Push Element Motor (3) forward to disengage Bearing (3-A) from Hole (2-A) in Motor Bracket (2), and slide Motor out through Slot (2-B).

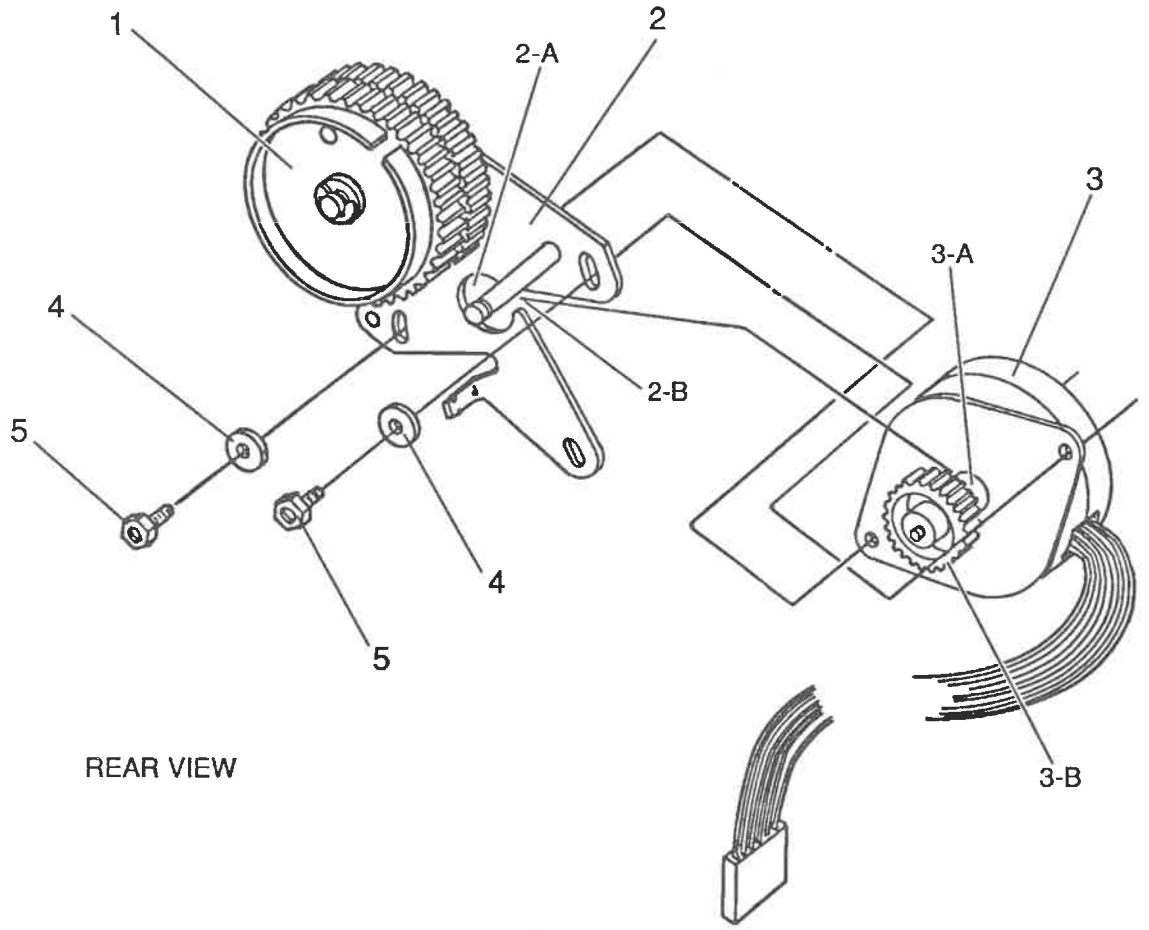

Replacement:

A) Wind Element Scissor Gears (1) against spring tension and hold Gears.

B) Slide Element Motor (3) through Bracket Slot (2-B), and push Motor (3) rearward so Bearing (3-A) seats in Bracket Hole (2-A) while making sure Drive Gear (3-B) meshes with Scissor Gears (1). Release Scissor Gears after Bearing is seated and Gears are meshed. Hold Element Motor in place and reinstall two Washers (4) and two Screws (5).

Adjustments Broken: Element Motor Position (Adjustment #1).

12. ELEMENT MOTOR REMOVAL

1) Remove Frame Assembly (see Frame Assembly Removal).

2) Unhook SPRING (8). Remove 'E' RING (9), HOME POSITIONER (7) and ACTUATOR (6).

3) Remove two SCREWS (5) and two WASHERS (4).

4) Push ELEMENT MOTOR (3) forward to disengage BEARING (3-A) from HOLE (2-A) in MOTOR BRACKET (2), and slide Motor out through SLOT (2-B).

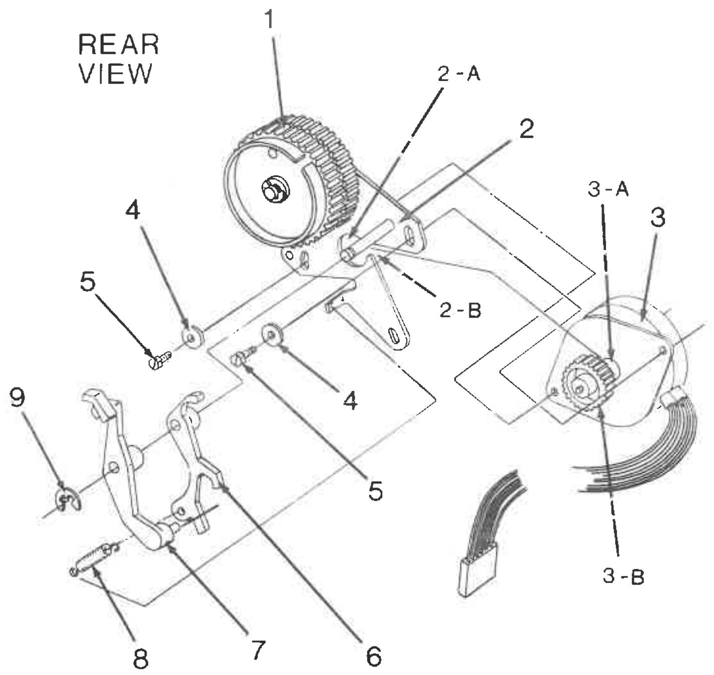

REPLACEMENT:

A) Wind ELEMENT SCISSOR GEARS (1) against spring tension and hold Gears.

B) Slide ELEMENT MOTOR (3) through BRACKET SLOT (2-B), and push MOTOR (3) rearward so BEARING (3-A) seats in BRACKET HOLE (2-A) while making sure DRIVE GEAR (3-B) meshes with SCISSOR GEARS (1). Release Scissor Gears after Bearing is seated and Gears are meshed.

C) Reassemble remaining components in reverse sequence.

ADJUSTMENTS BROKEN: Element Motor Position (Adjustment #2).

13. ELEMENT DRIVE SHAFT AND BEARINGS REMOVAL

1) Remove Element Motor and Hammer Solenoid Assembly (see Removals Index).

2) Remove E-RING (1), Outer SCISSOR GEAR (2), and SPRING (3).

3) Pry off Inner SCISSOR GEAR (4). NOTE: This Gear must be replaced with a new one after prying it off.

4) Remove two SCREWS (5).

5) Pivot STUD (6-A) out of SLOT (10-A) in CARRIER MOLDING (10), and remove BRACKET (6), BEARING RETAINER (7), BEARINGS (8), SPRING (9), WASHER (11), and ELEMENT DRIVE SHAFT ASSEMBLY (12). CAUTION: Carefully remove BRACKET (6) to overcome SPRING (9) tension.

REPLACEMENT:

A) Insert ELEMENT DRIVE SHAFT (12) with WASHER (11) through Drive Shaft Hole in CARRIER MOLDING (10).

B) Reassemble BEARINGS (8), SPRING (9), BEARING RETAINERS (7), and BRACKET (6) on Drive Shaft. NOTE: Smaller diameter of BEARINGS (8) fit into RETAINERS (7). Shoulder End of RETAINERS (7) seats in SPRING (9).

C) Replace two SCREWS (5).

D) Rotate DRIVE DISC (12-A) so that Round HOLE (12-B) is at 12 o'clock position. Hold new Inner SCISSOR GEAR (4) with HOLE (4-A) at about 11 o'clock position as viewed from the rear, and press Gear onto Drive Shaft until it bottoms on Drive Shaft SHOULDER (12-C). NOTE: This positioning assures that Element Motor will be within adjustment range when reassembled.

E) Assemble SPRING (3) to Inner GEAR SPRING ANCHOR (4-B) with other Spring Loop facing HOLE (4-A). Place Outer GEAR (2) on SHAFT (12), hook Spring Loop with Outer Gear Spring Anchor, and twist Gears until Spring Anchors fit in Gear Holes: Assemble E-RING (1).

F) Replace Hammer Solenoid Assembly.

G) Replace Element Motor per Element Motor Replacement procedure.

ADJUSTMENTS BROKEN:
Element Motor Position (Adj. #2).

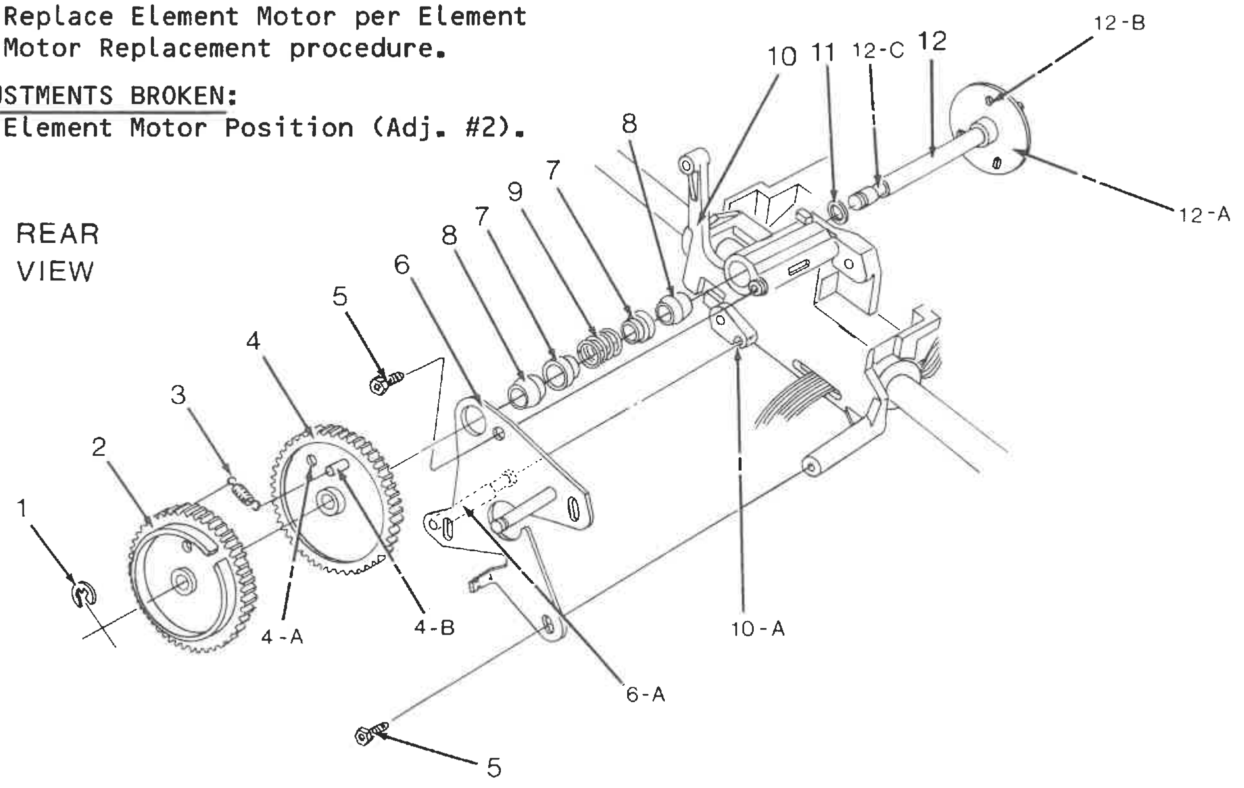

14. Element Drive Shaft and Bearings Removal

1. Remove Element Motor and Hammer Solenoid Assembly (see Removals Index).
2. Remove E-Ring (1), Outer Scissor Gear (2), and Spring (3).
3. Pry off Inner Scissor Gear (4). Note: This Gear must be replaced with a new one after prying it off.
4. Remove two Screws (5).
5. Pivot Stud (6-A) out of Slot (10-A) in Carrier Molding (10), and remove Bracket (6), Bearing Retainers (7), Bearings (8), Spring (9), Washer (11), and Element Drive Shaft Assembly (12). ***Caution: Carefully remove Bracket (6) to overcome Spring (9) tension.***

Replacement:

A) Insert Element Drive Shaft (12) with Washer (11) through Drive Shaft Hole in Carrier Molding (10).
B) Reassemble Bearings (8), Spring (9), Bearing Retainers (7), and Bracket (6) on Drive Shaft. Note: Smaller diameter of Bearings (8) fit into Retainers (7). Shoulder End of Retainers (7) seats in Spring (9).
C) Replace two Screws (5).
D) Rotate Drive Disc (12-A) so that Round Hole (12-B) is at 12 o'clock position. Hold new Inner Scissor Gear (4) with Hole (4-A) at about 11 o'clock position as viewed from the rear (arrow molded inside gear should be parallel with the Rear Frame crosspiece), and press Gear onto Drive Shaft until it bottoms on Drive Shaft Shoulder (12-C). Note: This positioning assures that Element Motor will be within adjustment range when reassembled.
E) Assemble Spring (3) to Inner Gear Spring Anchor (4-B) with other Spring Loop facing Hole (4-A). Place Outer Gear (2) on Shaft (12), hook Spring Loop with Outer Gear Spring Anchor, and twist Gears until Spring Anchors fit in Gear Holes: Assemble E-Ring (1).
F) Replace Hammer Solenoid Assembly.
G) Replace Element Motor per Element Motor Replacement procedure.

Adjustments Broken:
Element Motor Position (Adjustment #1).

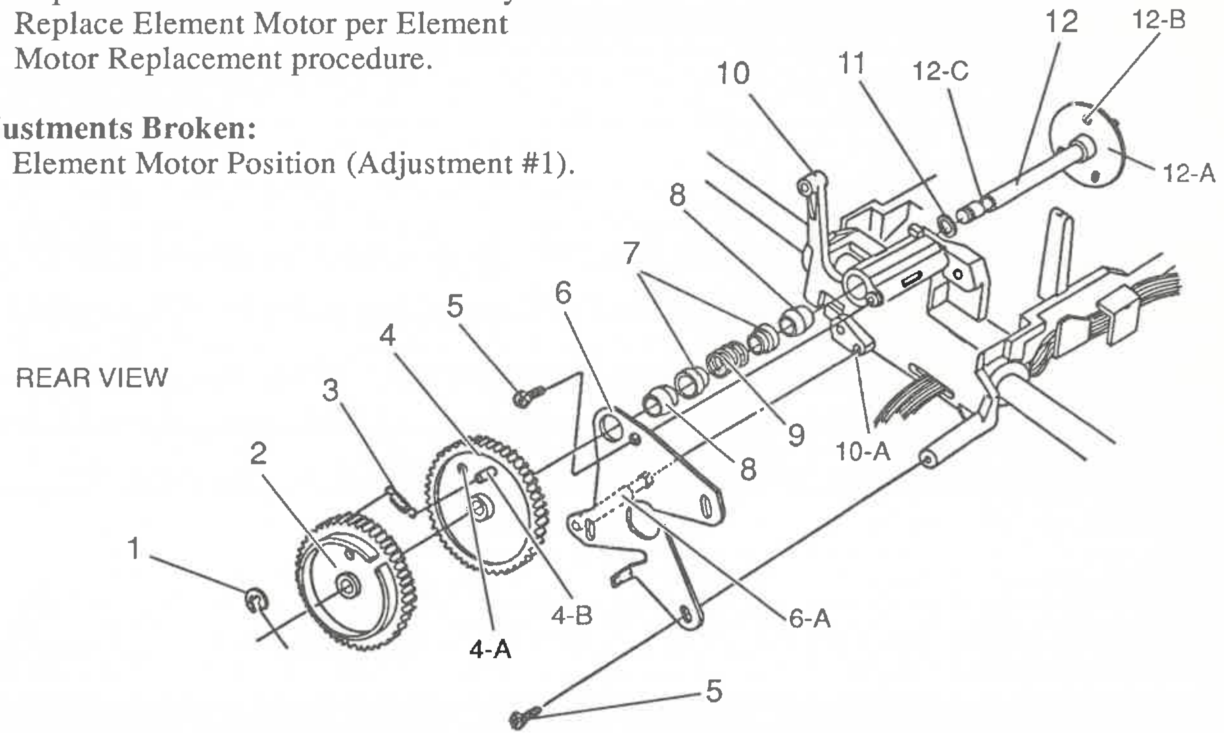

15. Platen and Paper Table Removal

1. Remove Mask and Frame Assembly (see Removals Index).
2. Unhook Spring (4) from Linespace Pinion Pivot (3). Remove Pivot (3) and Linespace Pinion Assembly (2). Note: Pin (11) may fall free.
3. Unhook Spring (10) and remove Paper Release Lever (9).
4. Remove E-Ring (1).
5. Hold Platen Knob (5) with a 3/8" wrench over square portion of Knob Shaft (5-A) and remove Screw (8). Note: If you simply hold right Platen Knob, it will likely break when loosening Screw (8).
6. Hold Platen (6) and remove Platen Knob (5).
7. Lift out Platen (6) and Paper Table (7).

Replacement: Reverse procedure. Note: Formed Tab in Paper Table seats in Hole of Paper Release Shaft, and Flange (3-A) in Pinion Pivot seats in Groove (11-A) of Pin.

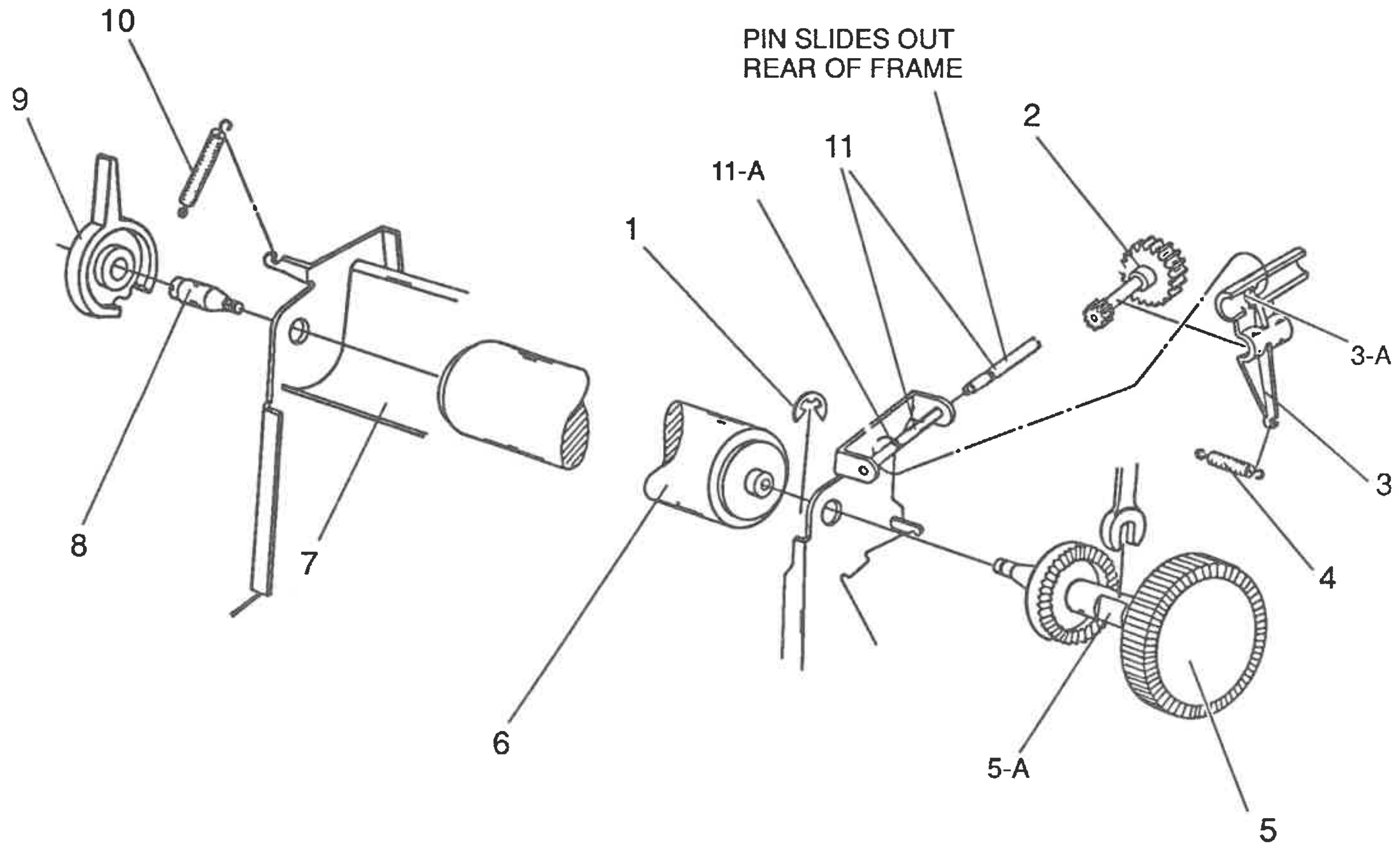

16. Carrier Motor and Carrier Rack Drive Assembly Removal

1. Remove Frame Assembly with Carrier Molding (see Removals Index).
2. Remove right Line Indicator Screw (10).
3. Remove two Screws (1).
4. Unhook Spring (8) from left Side Frame (9).
5. Remove Carrier Drive Rack (6) from Tab (7-A) on Right Frame, and lift out Carrier Return Bracket (3) and Carrier Motor (2). Remove Carrier Motor from Bracket.
6. Remove Slider (5) and Spring (4) from Carrier Return Bracket (3).

Replacement: Reverse Procedure.

Adjustments Broken: Line Indicator Position (Adjustment #7).

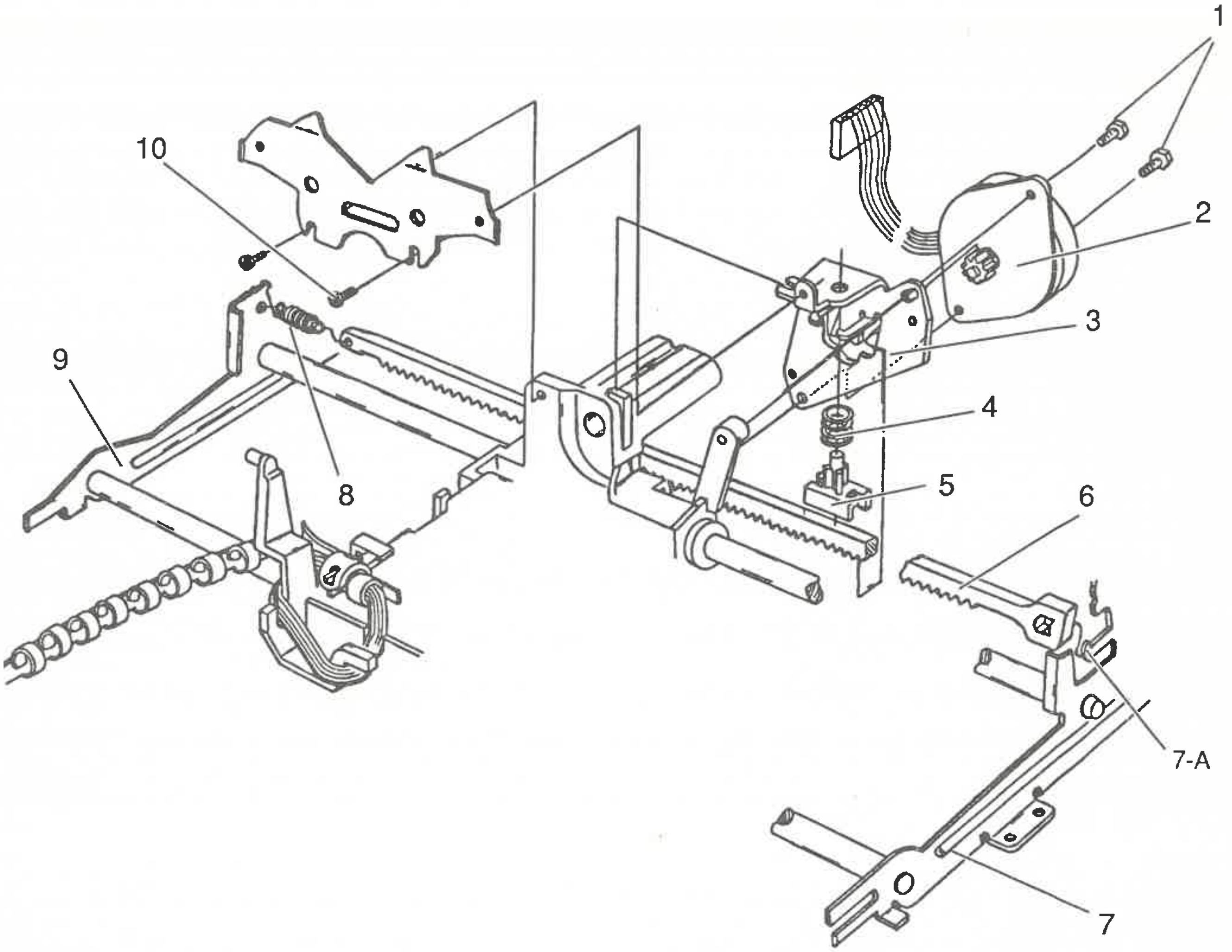

17. Carrier Molding Removal

1. Remove Frame Assembly, Rack Drive, Platen, and Paper Table (see Removals Index).
2. Spread Frames to disengage Rear Rail (7) from Frames.
3. Disengage Carrier Molding (3) from Front Rail (6), and slide Rear Rail (7) out of Carrier Molding.
4. Snap off two Felt Retainers (1), and remove two Felts (2).
5. Unhook Restraint Spring (4) from Carrier Molding (3) and remove Carrier Restraint (5).

Replacement: To replace Carrier Molding, remove all components from Molding (see Removals Index). Reverse procedures.

Adjustments Broken: 1, 3, & 7.

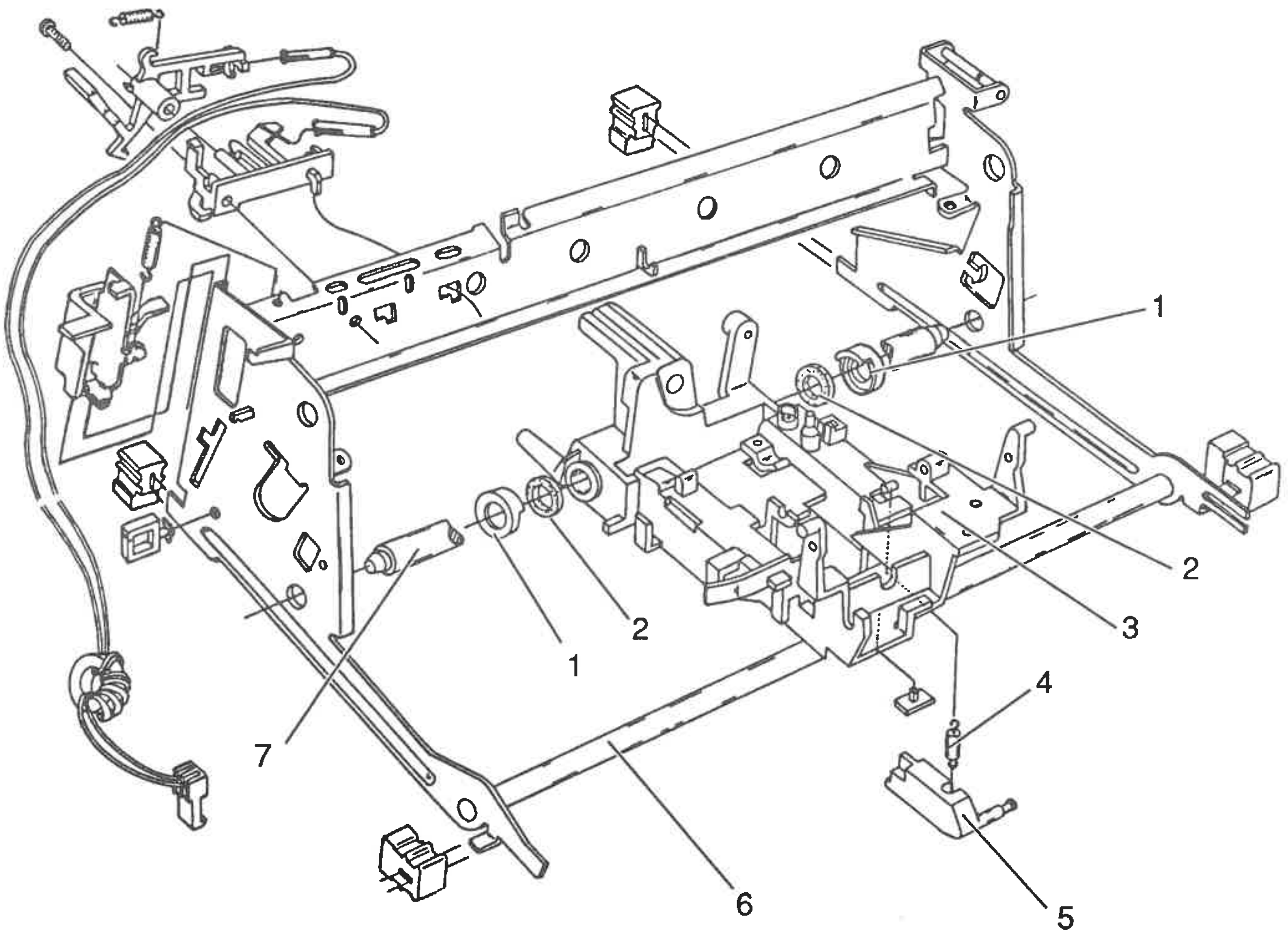

SECTION 5

ADJUSTMENTS

Adjustment Sequence Branch Display	Adjustment	Page Number
1 ↓	1. Element Motor Position	5-2
2	2. Hammer Center Position	5-3
3 ↓	3. Hammer Assembly Position	5-4
4	4. Ribbon Guide Position	5-4
5	5. Ribbon Cassette Position	5-5
6	6. Correction Cassette Lift	5-5
7	7. Line Indicator Position	5-6
8	8. Line Indicator Clearance from Platen	5-6

General Adjustment Procedure: Mask removal is required for access to most checks and adjustments. Additional access requirements are noted when applicable. All adjustments should be checked with Power Cord unplugged unless otherwise specified.

Circled reference numbers (i.e. (5)) in the illustrations indicate adjustment points.

The **Branch Display** above shows the relationships among adjustments. The arrow (⟶) means "*affects.*"

Example: 1 ↓ 2

Read this display as follows: 1 affects 2; 2 affects no other adjustment; 2 depends on 1 being correct.

Energizing Element Motor for Adjustments

Two adjustments require energizing the Element Motor. Hold down the "E" Keybutton with Lid Switch Actuator Spring unhooked (or Deck closed), and turn power on. Release the Keybutton when Carrier movement stops.

Non-LCD Models: The Shift LED flashes and the Element Motor stays energized for one minute. After one minute, the machine beeps and the Carrier moves to Space 12.

LCD Models: The Carrier stops at the Preset Left Margin, the machine beeps 3 times, displays "Alignment Test" in the LCD, and the Element Motor stays energized for one minute. After one minute, the machine beeps 3 times, displays "Test Complete" in the LCD, and returns to Type or Memory mode.

This procedure may be repeated as often as necessary to make the adjustment. **Note:** Because of the Right Ribbon Switch, a Ribbon Cassette *must* be installed on the Carrier to energize the Element Motor.

1. Element Motor Position

Requirement:

With Phases EB and EA' energized, Element Motor should hold the Home Character (e) Element Petal (1) at 12 o'clock position.

To Check: Hold down the "E" Keybutton, unhook the Lid Switch Actuator Spring, and turn power on to energize the Element Motor for one minute. Home Character Element Petal should be at 12 o'clock position, and parallel with Hammer. Turn power off and repeat this procedure if more time is required.

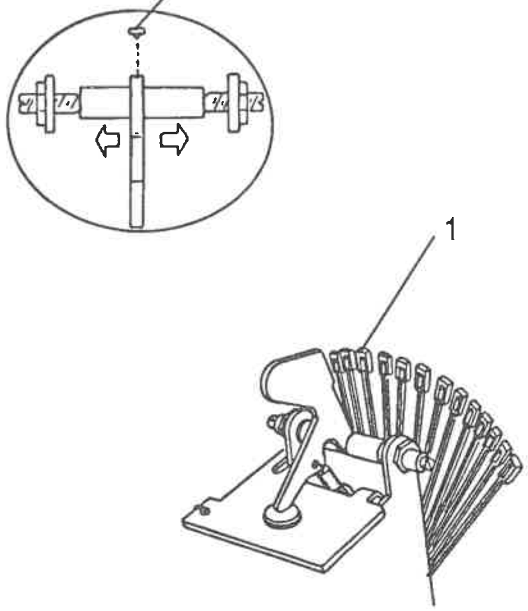

Adjustment:

1. With power off, loosen two Screws (4).
2. Energize Element Motor Phases EB and EA' (refer to "To Check" above).
3. Rotate Element Motor (2) so that Home Character (e) Element Petal is at 12 o'clock position. Motor Timing Mark (2-A) may align with Timing Mark (3-A).
4. Hold Motor in position and tighten upper Screw (4). Then tighten lower Screw (4). Check position of Element Petal and fine adjust if necessary. Turn power off.

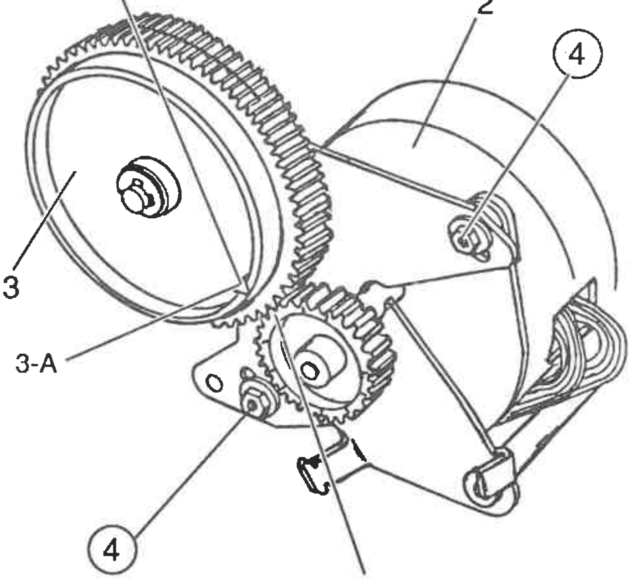

2. Hammer Center Position

Requirement:

A) With Element Motor Phases EB & EA' energized, notch of Hammer (2) should align with Prism of Element Petal (1).

To Check: Energize Element Motor Phases EB and EA' (refer to Adjustment #1 "To Check"). Manually press Hammer (2) against Element Petal (1). Petal should not move left or right when Notch of Hammer engages Prism of Petal.

B) Hammer (2) should be free on its pivots with no more than .0015" side play.

Adjustment:

1. Energize Element Motor Phases EB and EA' (refer to Adjustment #1 "To Check").
2. Remove Ribbon Guide from Hammer Pivot Nuts.
3. Loosen Nuts (4) & (5) and regulate Right Pivot Screw (3) to meet Requirement A; tighten Right Nut (4).
4. Hold Hammer against Right Pivot Screw (3), and regulate Left Pivot Screw (6) to meet Requirement B; tighten Left Nut (5).
5. Replace Ribbon Guide onto Hammer Pivot Nuts.

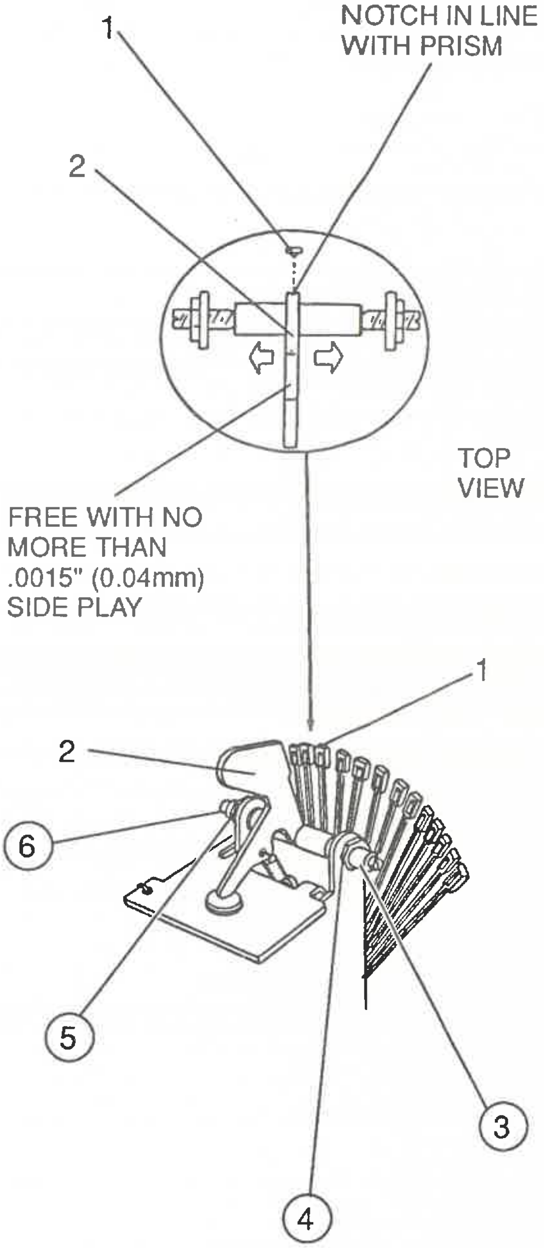

3. Hammer Assembly Position

Requirement:

With Hammer Assembly (1) latched in print position, there should be .135"-.143" clearance between Rear of Hammer Shaft (1-A) and Element Driver Pads (2-A). Check with Print Element and Ribbon Guide removed.

Adjustment:

1. Loosen Retractor Bracket Screw (3).
2. Rotate Element Driver (2) so that one pad is opposite Hammer Shaft.
3. With Hammer Assembly (1) latched in print position, insert a .139" Shim between Hammer Shaft (1-A) and Driver Pad (2-A).
4. Hold Hammer Assembly (1) against Shim, and tighten Screw (3).
5. Replace Ribbon Guide and Print Element.

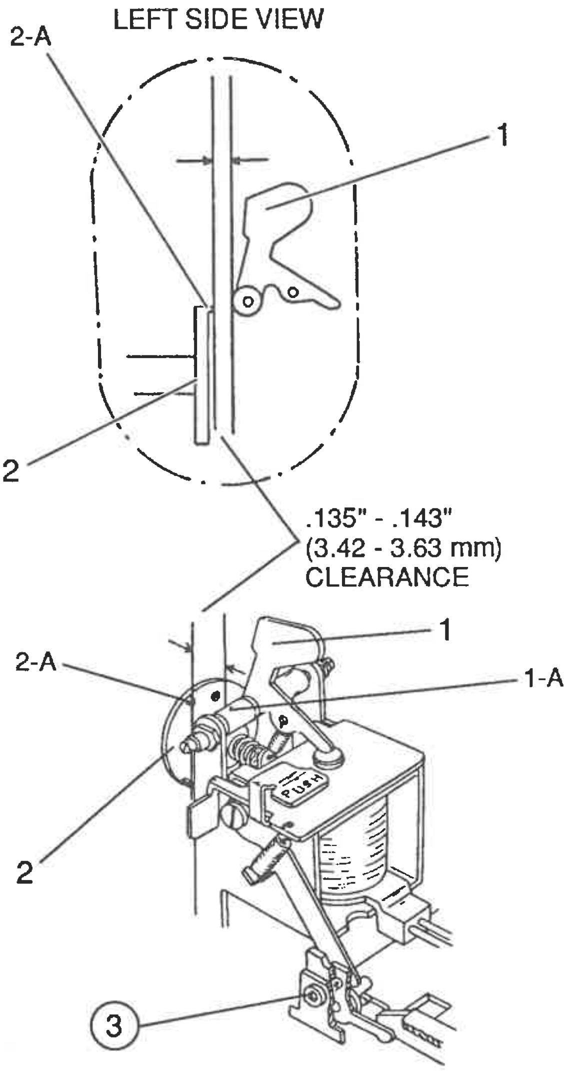

4. Ribbon Guide Position

Requirement:

With a Ribbon Cassette in place, there should be .020"-.030" clearance between the Ribbon and the typeface of the Print Element. *Note:* This should provide clearance between the Print Element and the inside surface of the Ribbon Guide (5).

Adjustment:

Form Hammer Solenoid Ear (4) forward or rearward to position Ribbon Guide.

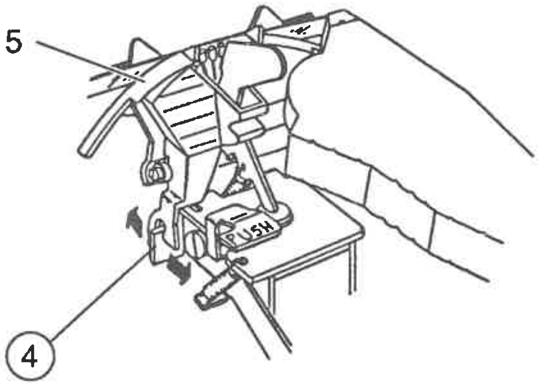

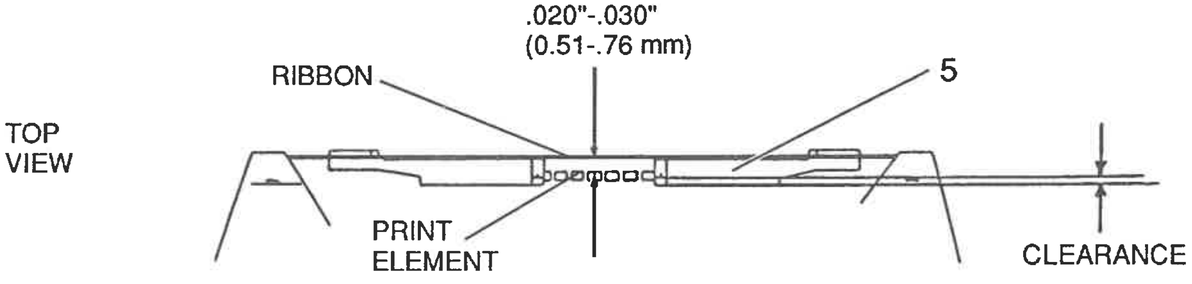

4. Hammer Assembly Position

REQUIREMENT

With HAMMER ASSEMBLY (1) latched in print position, there should be .135"-.143" (3.42-3.63 mm) clearance between Rear of HAMMER SHAFT (1-A) and ELEMENT DRIVER PADS (2-A). Check with Print Element and Ribbon Guide removed.

NOTE: The above requirement is for the Zinc Diecast Hammer. With the Sheet Metal Hammer there should be .182"-.190" (4.62-4.82 mm) clearance between Rear of HAMMER SHAFT (1-A) and ELEMENT DRIVER PADS (2-A).

LEFT SIDE VIEW

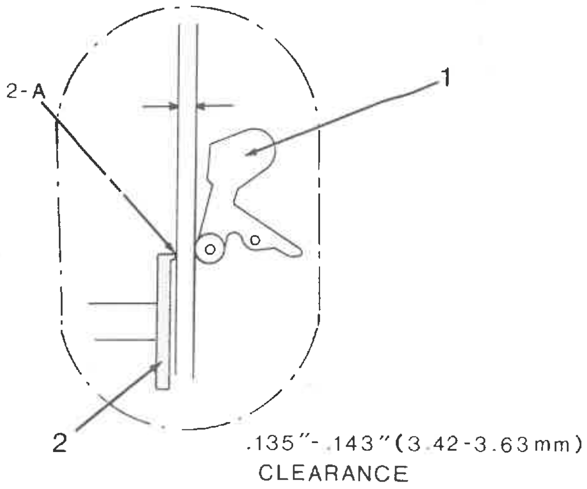

ADJUSTMENT:

1. Loosen RETRACTOR BRACKET SCREW (3).
2. Rotate ELEMENT DRIVER (2) so that one pad is opposite Hammer Shaft.
3. With HAMMER ASSEMBLY (1) latched in print position, insert a .139" Shim between HAMMER SHAFT (1-A) and DRIVER PAD (2-A).
4. Hold HAMMER ASSEMBLY (1) against Shim, and tighten SCREW (3).
5. Replace Ribbon Guide and Print Element.

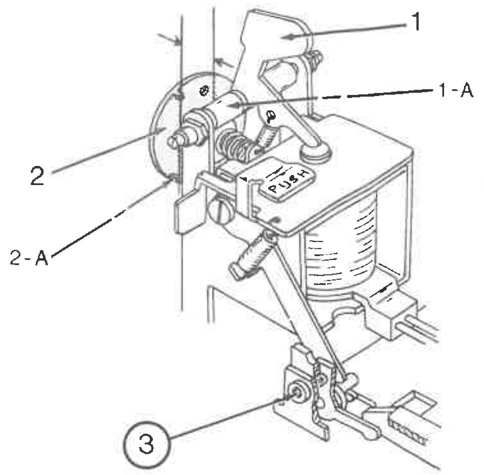

5. Ribbon Guide Position

REQUIREMENT:

With a Ribbon Cassette in place, there should be .020"-.030" clearance between the Ribbon and the typeface of the Print Element.

NOTE: This should provide clearance between the Print Element and the inside surface of the Ribbon Guide.

ADJUSTMENT:

Form Hammer Solenoid EAR (4) forward or rearward to position Ribbon Guide.

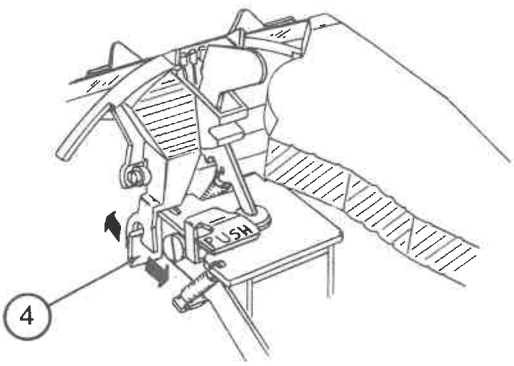

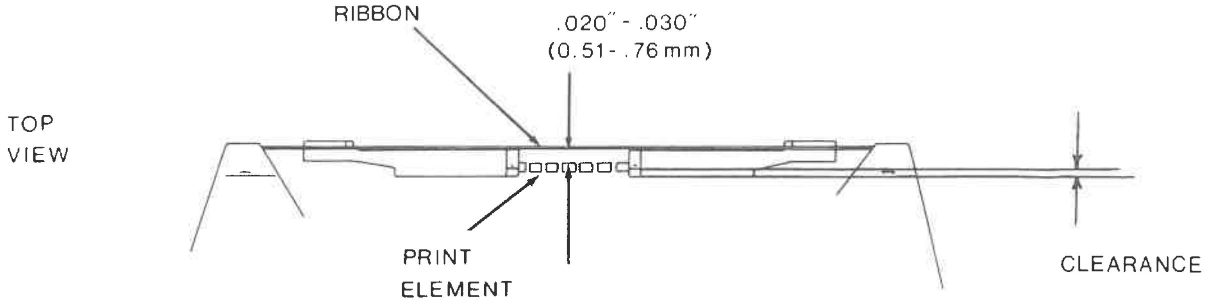

6. Ribbon Cassette Position

<u>REQUIREMENT:</u>

When typed with a Script Print Element, the top of the "%" character should be .030"-.050" from the top of the Cassette Ribbon.

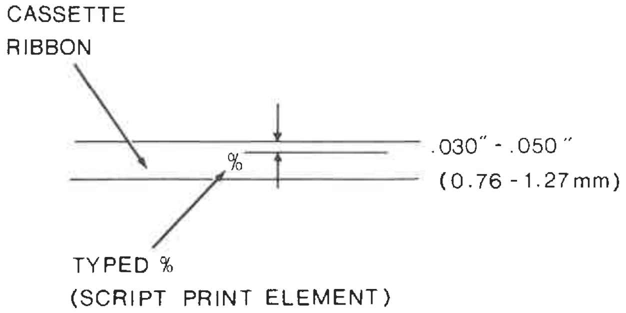

<u>ADJUSTMENT:</u>

Form DOWNSTOP ARM (1) on Correction Lift Bail up or down.

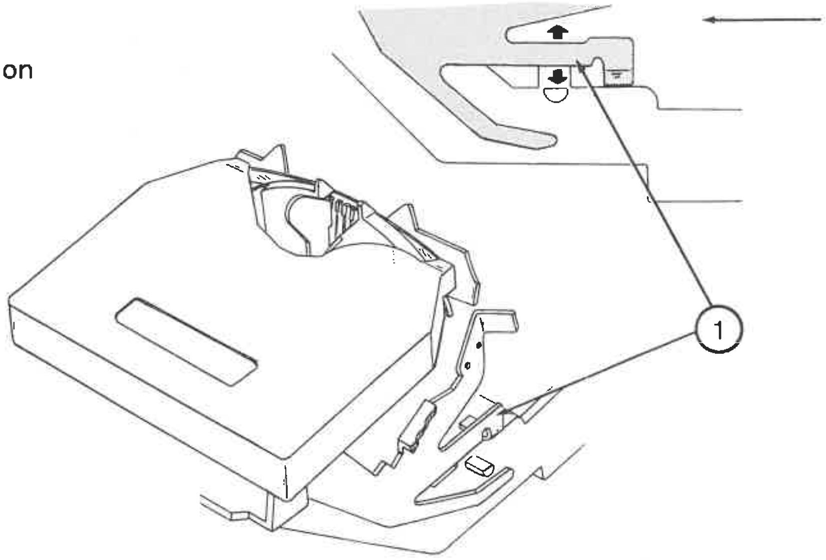

7. Correction Cassette Lift

<u>REQUIREMENT:</u>

When correcting with a Script Print Element, the distance between the top of the "%" character and the top of the correction ribbon should equal the distance between the bottom of a lower case "g" and the bottom of the correction ribbon. There should be .005"-.025" clearance between the Upstop Arm and Stud during a correction cycle.

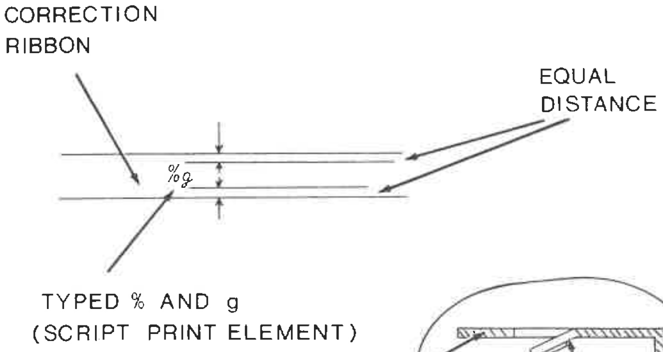

<u>ADJUSTMENT:</u>

Form ARM (2-A) on CORRECTION LIFT BAIL (2).

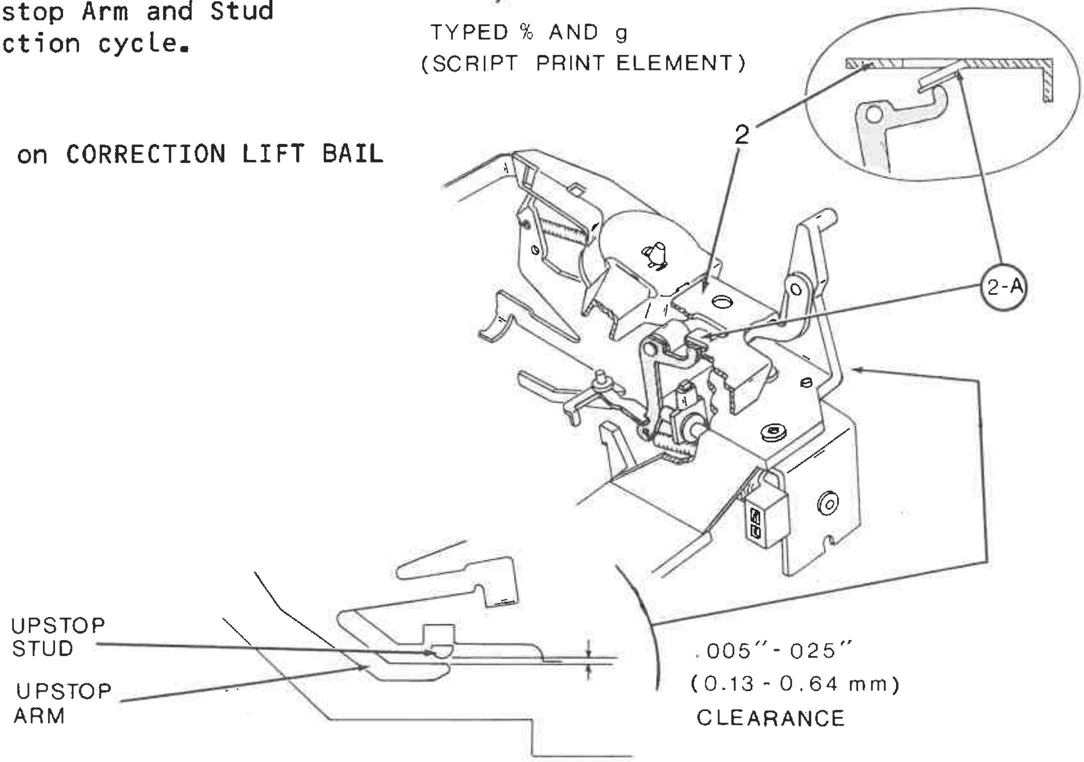

5. Ribbon Cassette Position

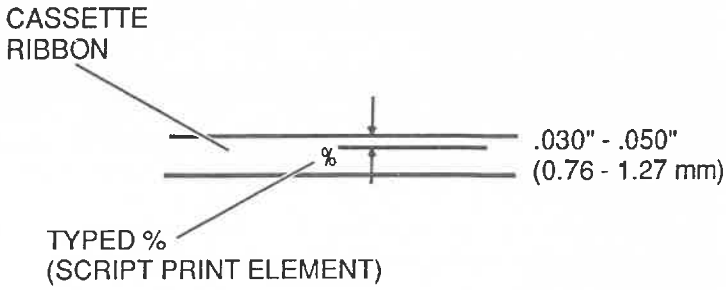

Requirement:

When typed with a Script Print Element, the top of the "%" character should be .030"-.050" from the top of the Cassette Ribbon.

Adjustment:

Form Downstop Arm (1) on Correction Lift Bail up or down.

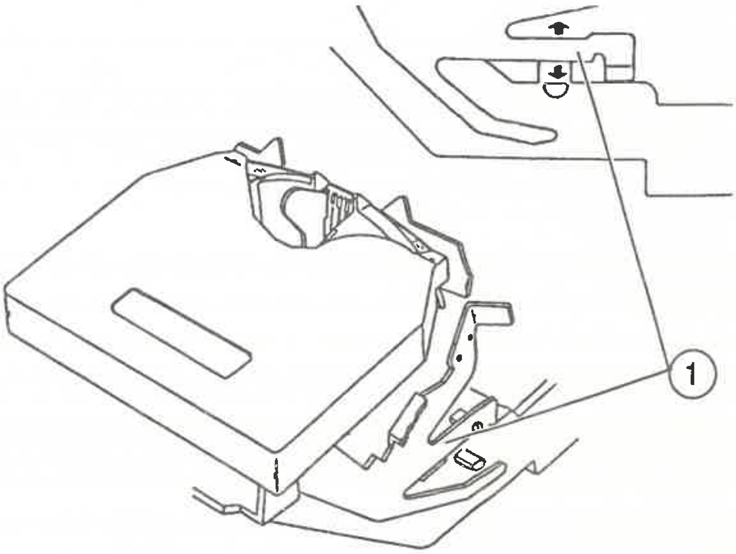

6. Correction Cassette Lift

Requirement:

When correcting with a Script Print Element, the distance between the top of the "%" character and the top of the correction ribbon should equal the distance between the bottom of a lower case "g" and the bottom of the correction ribbon. There should be .005"-.025" clearance between the Upstop Arm and Stud during a correction cycle.

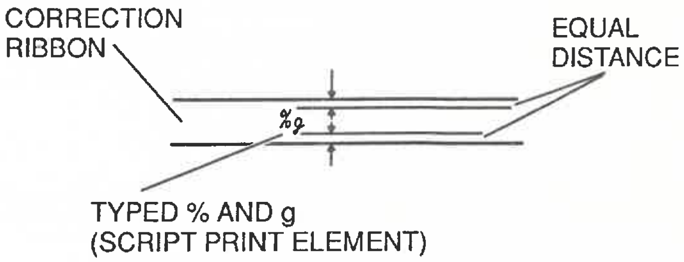

Adjustment:

Form Arm (2-A) on Correction Lift Bail (2).

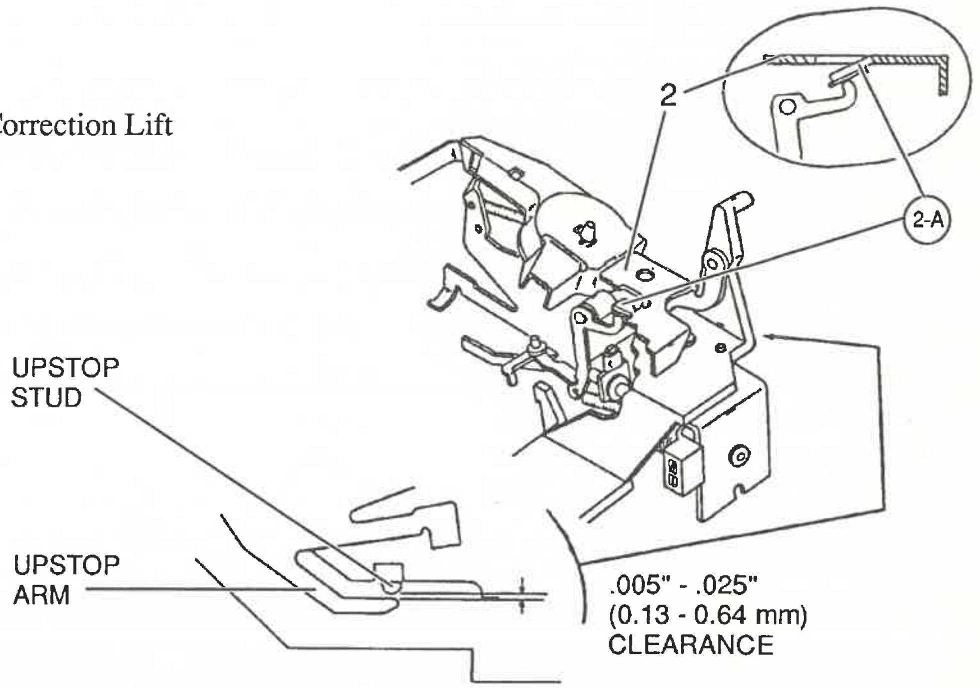

7. Line Indicator Position

Requirement:

Line Indicator Surfaces (1-A) should rest .005"-.015" below a row of printed "i's," and should be parallel with the typed characters.

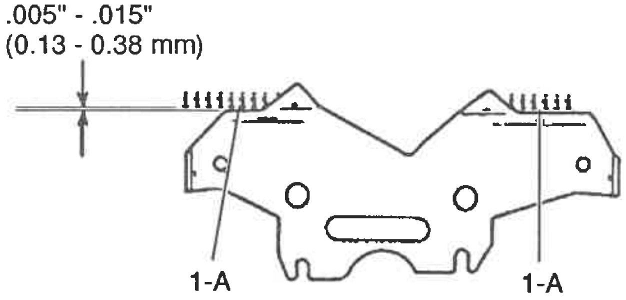

Adjustment:

Position Line Indicator (1) with attaching Screws (2).

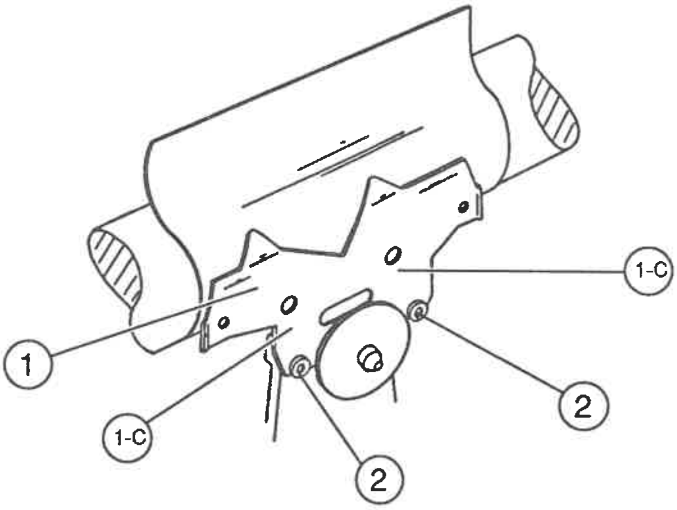

8. Line Indicator Clearance from Platen

Requirement:

There should be .005"-.020" clearance between Line Indicator (1) and Platen (3).

Adjustment:

Form Left and Right Line Indicator Surfaces (1-C) forward or rearward.

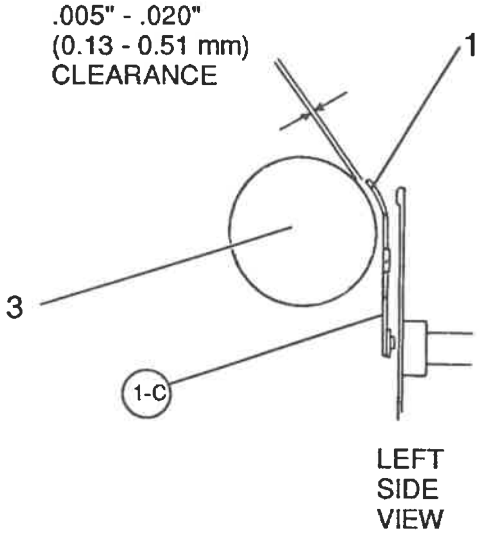

SECTION 6

TROUBLESHOOTING

INDEX

SUBJECT	PAGE NUMBER
Initialization Sequence	6-2 thru 6-4
Description	6-2 & 6-3
Flow Chart	6-4
Troubleshooting Guide	6-5 to 6-9
Troubleshooting Techniques	6-5
Watchdog Circuit	6-5
Liquid Crystal Display (LCD)	6-5
Machine Totally Dead	6-6
Machine Fails to Initialize or Repeats Initialization	6-6 & 6-7
Machine Completes Initialization, but Shift LED Flashes or LCD shows "LIDS?-RIBBONS?"	6-8
Index Motor Fails	6-8
Prints Wrong Characters	6-8
Hammer Solenoid Fails to Fire	6-9
Beeper Fails to Beep	6-9
Ribbon Cassette Feeds, but Correction Cassette does not Lift and Feed	6-9
Poor Vertical Correction Registration	6-9
Left Margin Changes	6-9
Resistance & Voltage Checks	6-10 & 6-11
Keyboard Troubleshooting	6-12
Keyboard Service Functions at Power Up	6-13

INITIALIZATION SEQUENCE

The sequence of events which occur during initialization is described below. Understanding this process enables the technician to compare what **does** happen with what **should** happen, which can often lead to quick diagnosis of a problem.

1. When the Power Switch is turned on, the Ribbon Solenoid quickly energizes to insure the Ribbon mechanism is in its proper starting position. The Carrier moves .400" to the right to assure that the Left End Switch Positioner is not holding the Left End Switch closed, and then moves .100" to the left.

2. The Carrier Motor Shaft is stabilized by the Electronics applying holding current to the Carrier Motor phases.

3. The Index Motor Shaft is rotated for 1/2 forward linespace and then 1/2 reverse linespace to make sure the Drive Gears, Pinion, and Platen Gear are seated properly.

4. Quick rotation of the Element Motor Shaft takes place to snap the Element onto the Drive Disc (a maximum of 2 1/2 revolutions).

   LCD Models: Note: If a Right Ribbon Cassette is not placed in the Carrier or the wrong Ribbon Cassette is placed in the Carrier or the Lid Switch is closed (Lid open), steps 1 through 4 are performed, but the Carrier only moves right approximately 1 1/4" and stops. The LCD displays "LID?-RIBBONS?." If the proper Ribbon Cassette is installed in the Carrier and the Lid is closed, the machine continues its normal initialization sequence.

5. The Electronics checks if the Left End Switch is open. If the Switch is closed, the Electronics holds the Carrier stable until the Switch opens, and then begins initialization again.

6. The Carrier moves left for a maximum of four seconds to check the closing of the Left End Switch. If the Left End Switch never closes, the Initialization Sequence repeats itself every four seconds until the switch is closed or power is turned off. Note: On Non-LCD models, the electronics checks that the Right Ribbon Switch is open: if open, initialization continues; if closed, the Carrier moves to Space 8 or 9 and stops; and then the Shift LED flashes. Once the Right Ribbon Switch reopens, the machine continues its normal initialization sequence.

7. The Carrier moves 1.00" to the right and Electronics checks if the Switch opens. If the Switch is closed, the Electronics holds the Carrier stable until the Switch opens, and then begins initialization again.

8. The Carrier moves to the left until the Left End Switch closes, and then another .100" to the left.

9. The Electronics energizes the Element Motor counterclockwise for up to 1.2 revolutions. When the ear on the Left End Switch Positioner drops into the notch on the Rear Scissors Gear under Spring Tension, the Left End Switch opens. The Electronics stops shaft rotation and checks that the Left End Switch opened on the Element home phases. If the Left End Switch does not open, the Electronics holds the Carrier stable until the switch opens. If the Switch does not open when the proper Element Motor phases are turned on, the initialization sequence repeats until this does occur, or until power is turned off.

10. Carrier moves approximately .300" to the right. This new location is reference position Zero.

11. The Electronics checks to see if a Keyswitch for a Keyboard Service Function is closed. If so, the Electronics performs the function.

12. If Keyboard Service Function Keyswitches are open, the Carrier moves to the Preset Left Margin, and the Electronics applies holding current to the Carrier Motor Phases.

    The Left End Switch is also used as a Lid Switch. Whenever the Deck is raised, the Lid Switch Actuator closes the Left End Switch through Spring tension. On Non-LCD Models, the Shift Lock LED flashes. On LCD Models, the Carrier moves to position 84 and the LCD displays "LID?-RIBBONS?." When the Deck is closed, the Switch opens, and the Carrier reinitializes and relocates to its previous position ready for typing.

INITIALIZATION SEQUENCE FLOW CHART

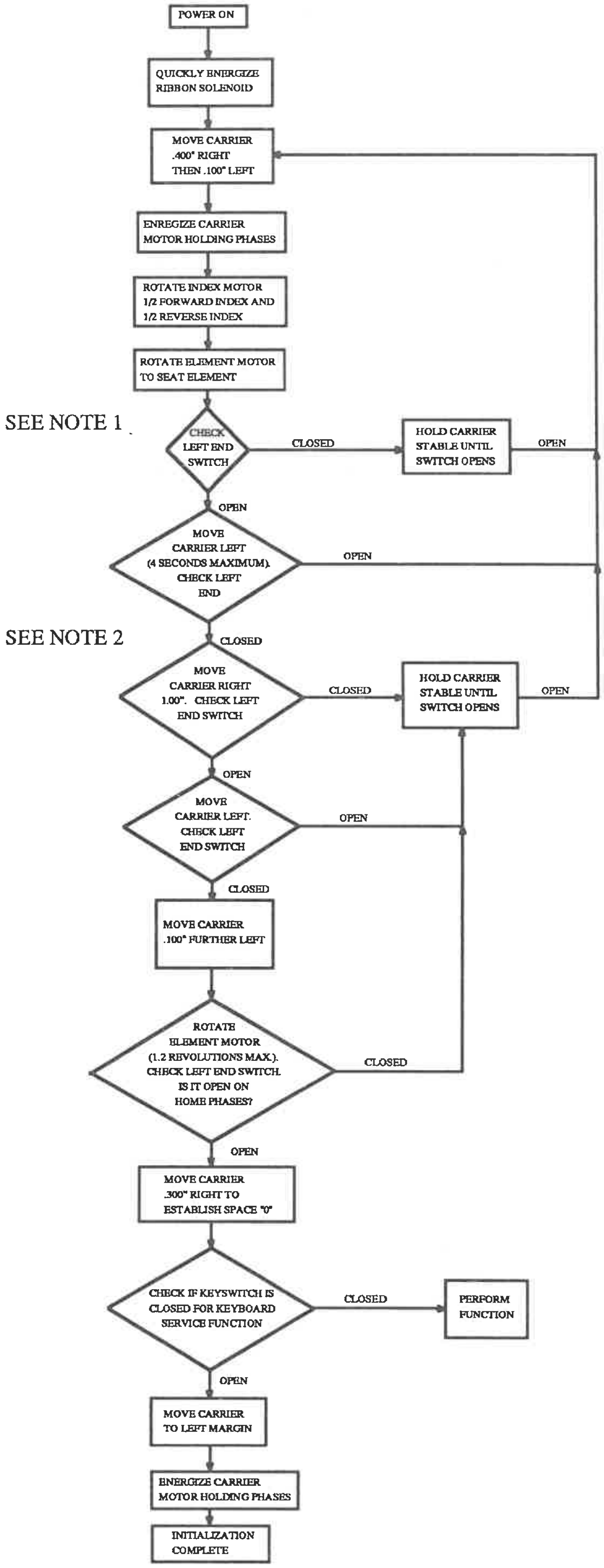

NOTES:

1) CHECK THAT RIGHT RIBBON SWITCH IS OPEN ON LCD MODELS.

2) CHECK THAT RIGHT RIBBON SWITCH IS OPEN ON NON-LCD MODELS.

TROUBLESHOOTING GUIDE

This Troubleshooting Guide provides probable cause for some specific machine problems. Since electrical problems may cause a machine failure during initialization, the technician should read and thoroughly understand the preceding section on the Initialization Sequence.

OBSERVE STATIC PRECAUTIONS

IMPORTANT: When working with static sensitive devices, such as the Liquid Crystal Display (LCD) and Printed Circuit Boards, be sure to observe static precautions to prevent damage to these devices.

GENERAL TROUBLESHOOTING TECHNIQUES

- Look for the obvious (broken wires, unplugged connectors, etc.)
- Check the problem part first, and then logically limit the possibilities through all associated wiring, connectors, and circuit boards.
- Check mechanical functions for freeness, lubrication, and proper operation.
- Check standard adjustments.

Diagram Reference Symbol

7B-1 Indicates appropriate diagram page number.

Watchdog Circuit

The Watchdog Circuit is a safety circuit that monitors the length of time that the Ribbon Solenoid, Hammer Solenoid, Element Motor, Carrier Motor, and Linefeed Enable (LCD Models only) are energized. If any of the above components on the Non-LCD Models remain energized longer than normal, the Watchdog Circuit shuts down the +18 VDC power supply, which in turn shuts down the +5 VDC power supply. On the LCD Models, if any component remains energized longer than normal, the Watchdog Circuit resets the Slave, Master, and RAM IC's.

Non-LCD Models: When checking the power supplies (+18VDC & +5VDC) of the machine, the voltage levels should be steady. If they vary up and down, disable the Watchdog Circuit by connecting ground to Point A on the schematic. Recheck the voltages. If voltages are okay, a defect exists in the machine or Watchdog Circuit.

LCD Models: If the machine continues to reinitialize, disable the Watchdog Circuit by connecting ground to Point A on the schematic. Reinitialize the machine. If machine initializes and reacts normally, a defect exists in a motor, solenoid, or Watchdog Circuit.

Liquid Crystal Display: On machines with a Liquid Crystal Display (LCD), a defective LCD may create a problem which appears to be a Control PC Board problem. Disconnect the LCD from the Control PC Board and initialize the machine. Under normal conditions, the LCD can be unplugged from the Control PC Board without affecting the machine's initialization and typing functions. If the machine initializes and functions properly, check machine with a known good LCD. If machine still malfunctions, change Control PC Board.

SYMPTOM: Machine Totally Dead

Probable Causes:
1) Transformer
2) Control PC Board

How to Check Power Circuit

A) Disconnect Power Cord from AC outlet. Disconnect Transformer Connector P-TRA from Control PC Board. Plug Power Cord into AC outlet.

Use a Voltmeter to measure the AC voltage across the two pins of Transformer Connector P-TRA. The reading should be 25-35 Volts AC. If not, replace Transformer.

B) If the reading is good, disconnect Power cord, and reconnect Transformer Connector P-TRA to the Control PC Board. Plug in Power Cord, and measure the AC Voltage across Connector P-TRA. The reading should be approximately 24 Volts AC. If not, there's a short on the Control PC Board.

C) If the reading is good, check the On-Off Switch contacts on the PC Board. On Non-LCD Models, the contacts close to turn on the machine; however, on LCD Models, the contacts are open when the machine is on. If the contacts check okay, the electronics on the Control PC Board are faulty--troubleshoot and repair the Board.

SYMPTOM: Machine Fails to Initialize or Repeats Initialization

Note: When checking initialization, move Carrier to the center of the machine, and turn machine on.

Probable Causes:
1) Control PC Board
2) Ribbon Solenoid
3) Hammer Solenoid
4) Element Motor
5) Carrier Motor
6) Left End/Lid Switch

How To Analyze Initialization Problems:

A) Make a general inspection of mechanical components of machine. Check for bent or broken parts. Move Carrier back and forth, and rotate Element Motor Shaft to check for binds.

B) If machine still does not initialize properly, analyze what happens when the machine is turned on. Compare what does happen with what should happen as described in the Initialization Sequence on pages 6-2 and 6-3.

C) **Service Hints:** Failure of certain component parts may result in the following symptoms: *7B-1 8B-1*

LCD and Non-LCD Models

Symptom	Probable Cause
Machine Initializes properly but keeps repeating initialization	1) Watchdog Circuit on Control PC Board is defective
Carrier Motor vibrates noisily, and continuously tries to initialize	1) Carrier Motor Phase or Phase connection is open or shorted 2) Control PC Board--motor circuit bad
Element Motor vibrates noisily, and continuously tries to initialize	1) Element Motor Phase or Phase connection is open or shorted 2) Control PC Board--motor circuit bad
Carrier vibrates against Left Side Frame then tries to reinitialize	1) Left End Switch or switch connection is always open 2) Control PC Board--Switch circuit bad
Element spins and Carrier moves approximately $1^1/_4$" to the right. LCD Models indicate "LIDS?-RIBBONS?." On Non-LCD Models, the Shift LED flashes.	1) Left End Switch is always closed 2) Control PC Board--Switch circuit bad
Carrier or Element doesn't move at all	1) Motor connectors not connected to Control PC Board 2) Control PC Board--Loss of 18 VDC to Motors

Non-LCD Models only

Symptom	Probable Cause
Carrier moves right three spaces and spins Print Element. Shift LED flashes at the beginning of Carrier movement. This sequence is repeated until Carrier contacts Right Frame.	1) Ribbon Solenoid is open or Ribbon Solenoid wiring to Control PC Board is defective. 2) Control PC Board--Solenoid circuit bad
No Carrier movement Left or Right, but Print Element wiggles about 1-2 petals every second. Shift LED flashes every second.	1) Hammer Solenoid is open or Hammer Solenoid wiring to Control PC Board is defective. 2) Control PC Board--Solenoid circuit bad

SYMPTOM: Machine Completes Initialization, but Shift LED Flashes or LCD shows "LIDS?-RIBBONS?"

Probable Causes:
1) Lid Switch Mechanism
2) Control PC Board
3) Right Ribbon System or mismatch of Ribbon Cassettes

To Check:

A) Check that Left End/Lid Switch contacts are open when the Lid is closed. If not, check for mechanical binds in mechanism. If mechanism operates properly, replace Left End/Lid Switch. If switch does not resolve problem, check wiring first; then replace Control PC Board. ***7E-1*** ***8E-1***

B) Check that Right Ribbon System Switch is open when the proper Ribbon Cassette is installed on the Carrier. If not, check for mechanical binds in mechanism. If mechanism operates properly, replace Right Ribbon System Switch contacts. If switch does not resolve problem, check wiring first; then replace Control PC Board. ***7E-1*** ***8E-1***

SYMPTOM: Index Motor Vibrates Noisily and Fails to Linespace

Probable Causes:
1) Index Motor--phase open or shorted
2) Control PC Board--Index motor circuit defective

To Check:

Check Index Motor for open or shorted phase windings (refer to Resistance Checks in this Section). If Index Motor is defective, replace it. If not, replace Control PC Board. ***7B-1*** ***8B-1***

SYMPTOM: Prints Wrong Characters or Strobes (Hammer Strikes Between Print Element Petals)

Probable Causes:
1) Defective Left End Switch.
2) Incorrect Element Motor Position (Adj. #1).
3) Incorrect Hammer Center Position (Adj. #2).
4) Broken Disc on Element Drive Shaft or binding Element Drive Shaft.
5) Linefinder or Ribbon Guide interferes with Print Element.
6) Improper Element Scissors Gear tension.
7) Inside Scissors Gear slips on Element Drive Shaft.
8) Defective Element Motor.
9) Defective Control PC Board.

SYMPTOM: Hammer Solenoid Fails to Fire

Probable Causes: 1) Hammer Solenoid
2) Control PC Board

How to Check for Solenoid Problems:

Check Solenoid for mechanical binds. Measure resistance of Solenoid and replace it if it is defective (refer to Resistance Checks in this Section). If resistance is good, replace Control PC Board. ***7B-1 8B-1*** Note: If the Hammer Solenoid fails to fire, mechanically the Ribbon Cassette fails to advance.

SYMPTOM: Beeper Fails to Beep

Probable Cause: Defective Beeper or Beeper Circuit on Control PC Board

To Check:

Try an action that requires the Beeper to function. If it does not beep, replace Beeper or Control PC Board.

SYMPTOM: Ribbon Cassette Feeds, but Correction Cassette does not Lift and Feed

Probable Causes: 1) Ribbon Solenoid
2) Control PC Board

To Check:

Check Ribbon Solenoid and Correction Bail for mechanical binds. Measure resistance of Solenoid and replace it if defective (refer to Resistance Checks in this Section). If resistance is good, replace Control PC Board. ***7B-1 8B-1***

SYMPTOM: Poor Vertical Correction Registration

Probable Causes: 1) Ribbon Guide/Linefinder resting on Platen
2) Paper Feed Rollers binding
3) Platen binding (problem usually occurs at left end)

To Check: Locate the source of the bind and free up the parts.

SYMPTOM: Left Margin Changes

Probable Cause: Mechanical interference with Carrier movement

To Check: Locate and remove cause of interference.

RESISTANCE AND VOLTAGE CHECKS

Use the following Resistance and Voltage Check Charts when troubleshooting problems with electrical components. With Volt/Ohmmeter probes on specified pins of the Connector, the resistance or voltage readings should read approximately at the values given in the charts. Note: Readings may vary between Volt/Ohmmeters. Refer to the Wiring Diagrams in the appropriate Diagrams Section and Pin locations.

Resistance Checks

All Resistance Checks must be made with the Power Off and the appropriate Connector unplugged from the Control PC Board. Refer to pages 7B-1 and 8B-1 to identify Connectors.

* When checking resistance of Motors, both common Connectors on each motor should be measured before assuming a phase is open. The correct resistance readings should occur on one or the other common, not both.

Component	*Connector*	*Pin Numbers*	*All USA and Non-LCD International Models Approximate Resistance*	*All International LCD Models*
*Element Motor	P-ELE			
COM and A		3 or 4 & 1	16 Ω ± 7%	24 Ω ± 7%
COM and A'		3 or 4 & 2	16 Ω ± 7%	24 Ω ± 7%
A and A'		1 & 2	32 Ω ± 7%	48 Ω ± 7%
COM and B'		3 or 4 & 5	16 Ω ± 7%	24 Ω ± 7%
COM and B		3 or 4 & 6	16 Ω ± 7%	24 Ω ± 7%
B' and B		5 & 6	32 Ω ± 7%	48 Ω ± 7%
*Carrier Motor	P-CAR			
COM and A		3 or 4 & 1	36 Ω ± 7%	36 Ω ± 7%
COM and A'		3 or 4 & 2	36 Ω ± 7%	36 Ω ± 7%
A and A'		1 & 2	72 Ω ± 7%	72 Ω ± 7%
COM and B'		3 or 4 & 5	36 Ω ± 7%	36 Ω ± 7%
COM and B		3 or 4 & 6	36 Ω ± 7%	36 Ω ± 7%
B' and B		5 & 6	72 Ω ± 7%	72 Ω ± 7%
*Index Motor	P-IND			
COM and A		3 or 4 & 1	50 Ω ± 7%	50 Ω ± 7%
COM and A'		3 or 4 & 2	50 Ω ± 7%	50 Ω ± 7%
A and A'		1 & 2	100 Ω ± 7%	100 Ω ± 7%
COM and B'		3 or 4 & 5	50 Ω ± 7%	50 Ω ± 7%
COM and B		3 or 4 & 6	50 Ω ± 7%	50 Ω ± 7%
B' and B		5 & 6	100 Ω ± 7%	100 Ω ± 7%
Left End Switch	P-LES	1 & 2	0 Ohms when closed; Infinite (∞) ohms when open	
Ribbon Solenoid	P-RSOL	1 & 2	9.60 Ω ± 1	
Hammer Solenoid	P-HSOL	1 & 2	1.98 Ω ± .2	
Transformer	AC Plug	Prongs	Approximately 17 Ω	
	P-TRA	1 & 2	Approximately 1 Ω	
Right Ribbon Switch	P-RRS	1 & 2	0 Ohms when closed Infinite (∞) Ohm when open	

DC Voltage Checks

All DC Voltage checks must be made with Connectors in place and Power On. Set Voltmeter for DC Volts and appropriate voltage range. With Power Off, touch common probe of Voltmeter to Logic Ground, and touch the other probe to the Check Point listed in the Chart. Turn Power On, allow machine to initialize, and take readings (Idle State). Refer to the appropriate Diagrams Section for Connector locations. *7B-1 7D-1 8B-1 8D-1*

***Caution:** Whenever performing checks with Power On, take care not to short two points together with the Voltmeter probes.*

Component	*-Check Point-* Non-LCD Models	*-Check Point-* LCD Models	*-Location-* Non-LCD Models	*-Location-* LCD Models	*Approximate DC Voltage*
Control PC Board:					
+36 VDC	R1	S1	Left Side	Rivet Area	+36 VDC
+18 VDC	W1	R63	Left Side	Left Side	+18 VDC
+5 VDC	R6	R61	Left Side	Left Side	+5 VDC
Left End Switch Closed:	P-LES	P-LES	Pin 1		<.12 VDC
			Pin 2		<.12 VDC
Left End Switch Open:	P-LES	P-LES	Pin 1		<.12 VDC
			Pin 2		+4.8 VDC
Ribbon Solenoid	P-RSOL	P-RSOL	Pins 1-2		+18 VDC
Hammer Solenoid	P-HSOL	P-HSOL	Pins 1-2		+18 VDC
Element Motor	P-ELE	P-ELE	Pins 1-6		+18 VDC
Carrier Motor	P-CAR	P-CAR	Pins 1-6		+.7 or >1.9 VDC

Note: Voltage reading depends upon location of the Carrier Rotor during holding current.

Index Motor	P-IND	P-IND	Pins 1-6		+18 VDC
Memory Back-up Battery		BAT 1		Positive Terminal (use Negative Terminal for Ground)	+2.3 VDC Nominal, but not less than 2 VDC

Transformer AC Voltage Checks

Make Transformer AC Voltage checks with Connectors in place and Line Cord plugged into AC outlet. Set Voltmeter for AC Volts and appropriate voltage range. Touch one probe to one point listed below, and the other probe to the other point. *7B-1 8B-1*

Check	*Check Points*	*Approximate Voltage*
Transformer Input	Check Line Voltage at Power Outlet	Line Voltage- 117 VAC **or** 220 VAC **or** 240 VAC
Transformer Output	P-TRA Pins 1 & 2	24 VAC minimum

KEYBOARD TROUBLESHOOTING PROCEDURE

Note: Refer to the appropriate Diagrams Section for Keyboard Switch Layout and Matrix Charts. *7A-2 7A-3 8A-2 8A-3*

1. Identify the Matrix Position Number(s) for the Key(s) from the Keyboard Switch Layout Chart (the character "1" is matrix position S2).

2. Identify the Column and Row for that position from the Keyboard Matrix Chart. Then determine Keyboard Connector Pin numbers that correspond with the column and row of the suspect key (i.e. position S2 is tied to Column C1 and Row R0, which correspond to pins 7 & 14 of the Keyboard Connector).

3. Determine whether the problem is with the Keyboard or Control PC Board as follows:

   A) Remove the Keyboard from the machine under test. Power up the machine to initialize it and actuate the Lid Switch.

   To check operation of any individual character, simply short the appropriate pins on the Control PC Board Connector J1 (or J2 on LCD Models) to see if that particular character types. For example, if checking the character "1," touch a Jumper Wire between pins 7 & 14 of Connector J1 (or J2 on LCD Models). This allows the typewriter to type the character "1" and repeat it until the Jumper Wire is removed. If the character fails to type, the problem is in the Control PC Board and replacement is necessary.

   B) If character does type, then problem is a Keyboard fault.

4. Diagnose a Keyboard fault as follows:

   A) Touch the one lead of an ohmmeter to the pin on the Keyboard Connector that corresponds with the appropriate Column. Then touch the other lead to the pin on the Keyboard Connector that corresponds with the appropriate Row [i.e. for position S2 touch one lead to Connector P1 (or P2 on LCD Models), Pin 7, (Column C1) and the other lead to Connector P1 (or P2 on LCD Models), Pin 14 (Row R0)]. Note: Since there are no Diodes used with this Keyboard, it makes no difference which ohmmeter lead is touched to the Matrix Column and which one is touched to the Matrix Row.

   B) Depress the Key being checked. If the switch is good, the ohmmeter shouldindicate less than 1000 ohms resistance. (Readings vary with different meters. To know what the meter should read, take a similar reading on a known good Key Switch in the Keyboard circuit). If meter indicates an open, replace the Molded Dome Switches.

   C) If there are a definite 7 or 8 characters or functions that do not operate, check to see if those 7 or 8 characters or functions are in the same Column or Row in the Keyboard Matrix. If they are, check all switches in that Column or Row through the Keyboard Connector. If they are bad, replace the Keyboard Flexible Circuit.

KEYBOARD SERVICE FUNCTIONS AT POWER UP

Some Keybuttons perform service functions if they are depressed and held down during initialization. To activate any of these functions, with the Jackets in place and deck closed (if Jackets are off machine, disable Lid Switch) depress the desired keybutton and hold it down until initialization is complete. Release the Keybutton after the Service Function begins.

If the Keyboard is disconnected from the machine, Service Functions can be entered by shorting the appropriate Keyswitch Row and Column pins on Keyboard Connector J1 (J2 on LCD Models). Remove the jumper after the Service Function begins. Refer to the appropriate Keyboard Layout Chart and Matrix Diagram to determine which Row and Column should be shorted to perform the Service Function. *7A-2 7A-3 8A-2 8A-3*

Keybutton	Function
	LCD and Non-LCD Models
Return	Initiates Self Typing. The machine prints out a line of characters, corrects some of them, and then performs a linespace and carriage return. The machine continues this self typing until power is turned off.
"E"	On Non-LCD Models, the Carrier moves to Space 0, and energizes Element Motor phases EB and EA' for one minute to make adjustments (Shift LED flashes at same time). After one minute, the machine beeps, the Carrier moves to Space 12, and the electronics returns to normal typing mode. On LCD Models, the Carrier moves to preset left margin, machine beeps three times, shows "ALIGNMENT TEST" in the LCD, energizes Element phase EB and EA' for one minute, beeps three times, shows "TEST COMPLETE" in the LCD, and returns to either Typewriter or Memory mode. Either machine must be turned off and then on again to energize for additional one minute intervals.
"S"	Prints out the part number of the Master (Non-LCD Models) or displays Master and Slave (LCD Models) of the Microcontrollers installed on the Control PC Board. Also, prints out the language that the software is designed for. On Non-LCD Models, the Carrier moves to the left margin for typing. On LCD Models, the machine must be turned off to cancel this function.
	LCD Models Only
"T"	Clears out all memory files and resets processors. "Sure? Y/N" shows in the LCD. If "Yes" is selected, the memory is cleared, and then Carrier goes to preset left margin and machine returns to either Typewriter or Memory Mode depending on main switch location. If "No" is selected, the Carrier moves to preset left margin and machine returns to either Typewriter or Memory mode.
"V"	Performs RAM check, clears all memory files, and resets processors. Carrier moves to Space 0 and "RAM Check" shows in the LCD. If the RAM is okay, "RAM OK Size = (size of RAM)" shows in the LCD. The machine must be reinitialized for Keyboard entry. When the machine reinitializes, it beeps three times, and "Memory Lost" shows momentarily in the LCD. This test resets margins to factory presets.

SECTION 7

DIAGRAMS

MODELS WITHOUT DICTIONARY

		PAGE NUMBER
7A	KEYBOARD DIAGRAMS	
	Keyboard Layout Chart	7A-2
	Keyboard Matrix Diagram	7A-3
7B	WIRING DIAGRAM	7B-1
7C	WIRE ROUTING	
	Frames	7C-1
	Carrier	7C-2
7D	COMPONENT DIAGRAM	
	Control PC Board	7D-1
7E	SCHEMATIC DIAGRAM	7E-1
→ 7F	WAVE FORMS	7F-1

KEYBOARD LAYOUT CHART

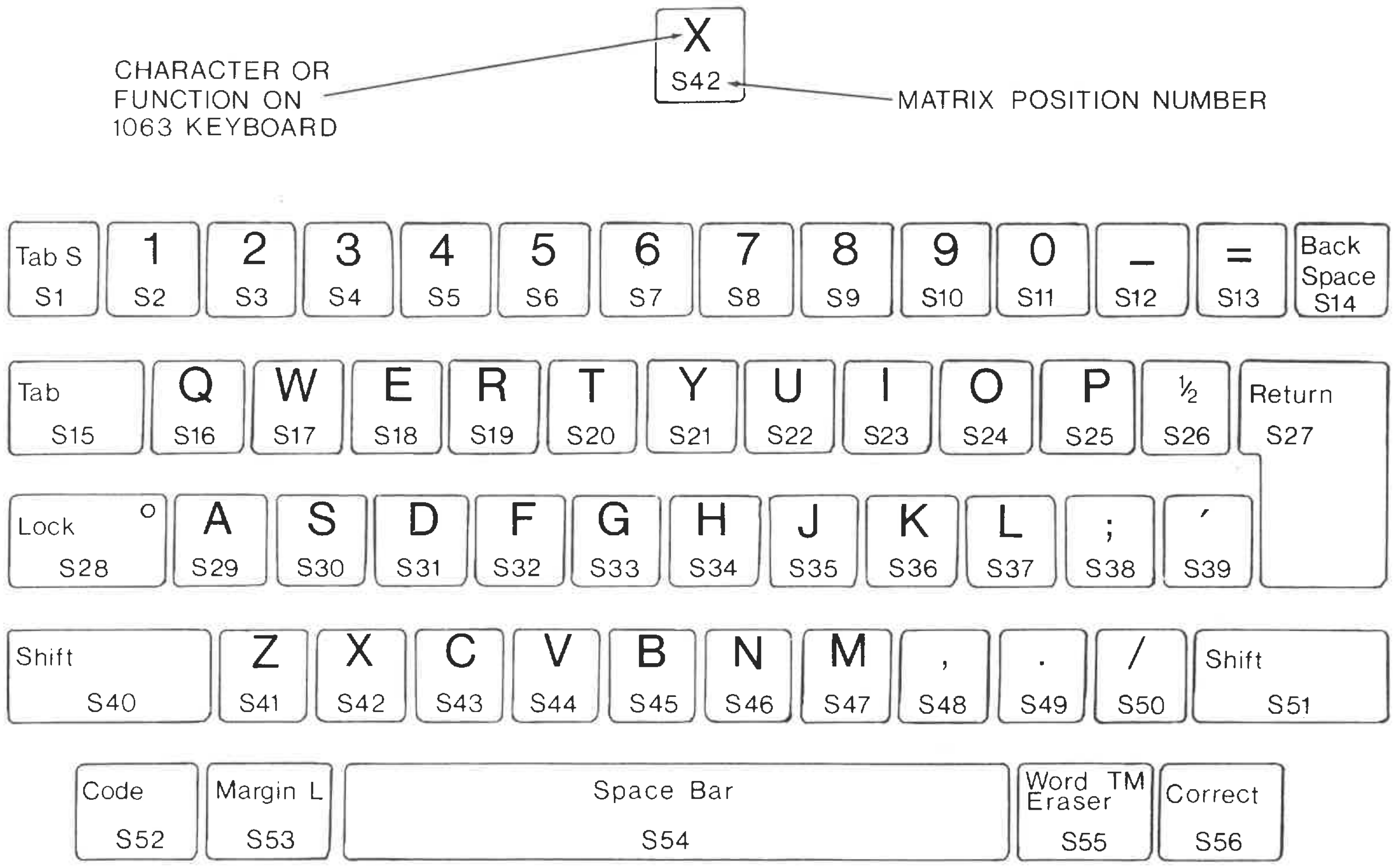

S = SWITCH

SECTION 7

DIAGRAMS

NON-LCD MODELS

		PAGE NUMBER
7A	KEYBOARD DIAGRAMS	
	Keyboard Layout Chart	7A-2
	Keyboard Matrix Diagram	7A-3
7B	WIRING DIAGRAM	7B-1
7C	WIRE ROUTING	
	Frames	7C-1
	Carrier	7C-2
7D	COMPONENT DIAGRAM	
	Control PC Board	7D-1
7E	SCHEMATIC DIAGRAM	7E-1
7F	WAVE FORMS	7F-1
7G	COMPONENT LAYOUTS	
	Component Side	7G-1
	Solder Side	7G-2

KEYBOARD LAYOUT CHART

NON-LCD MODELS

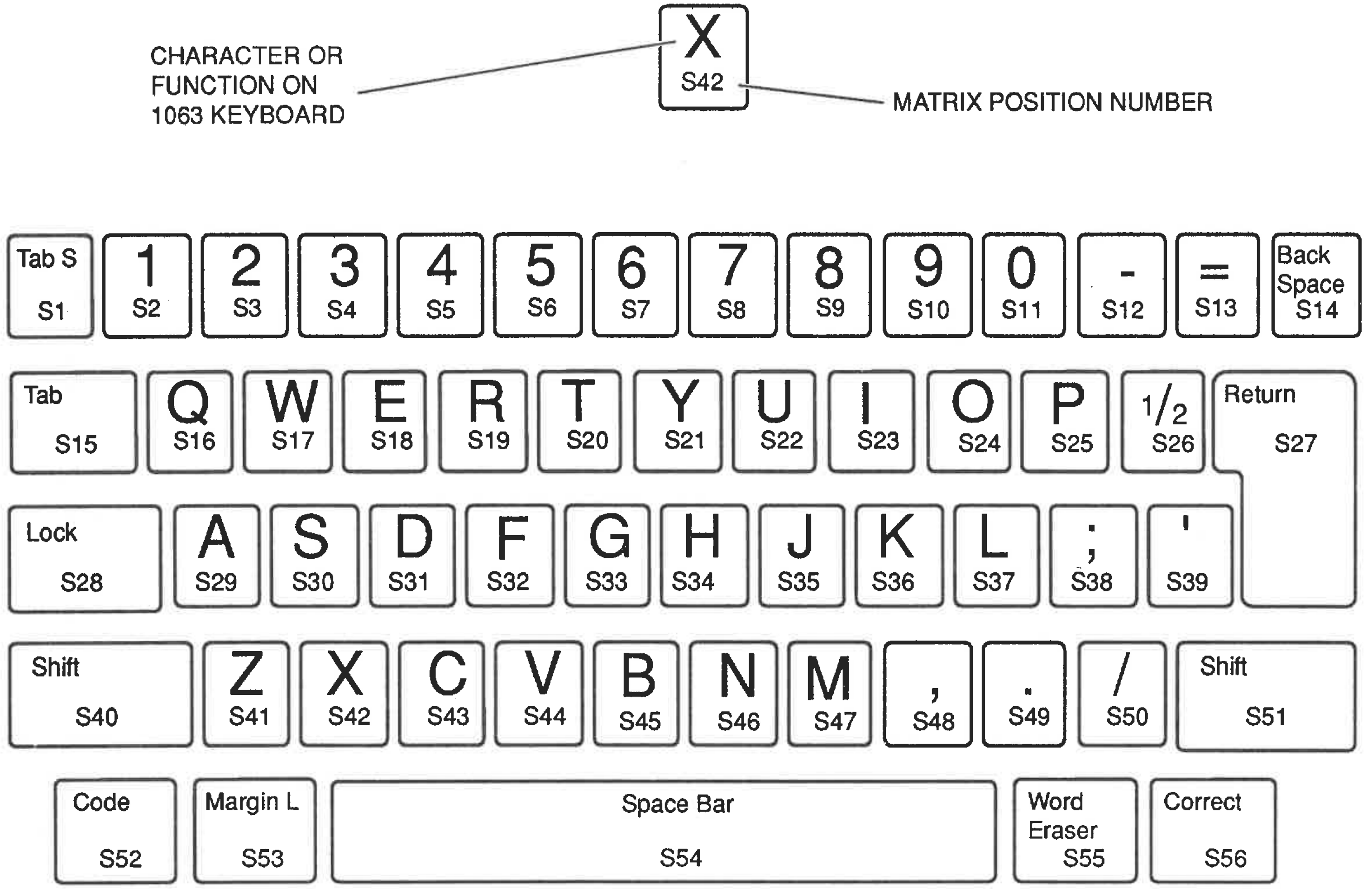

S = SWITCH

KEYBOARD MATRIX

NON-LCD MODELS

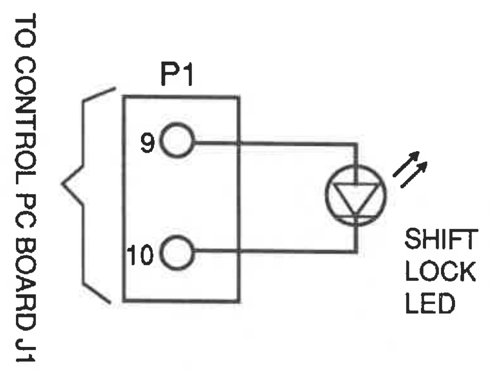

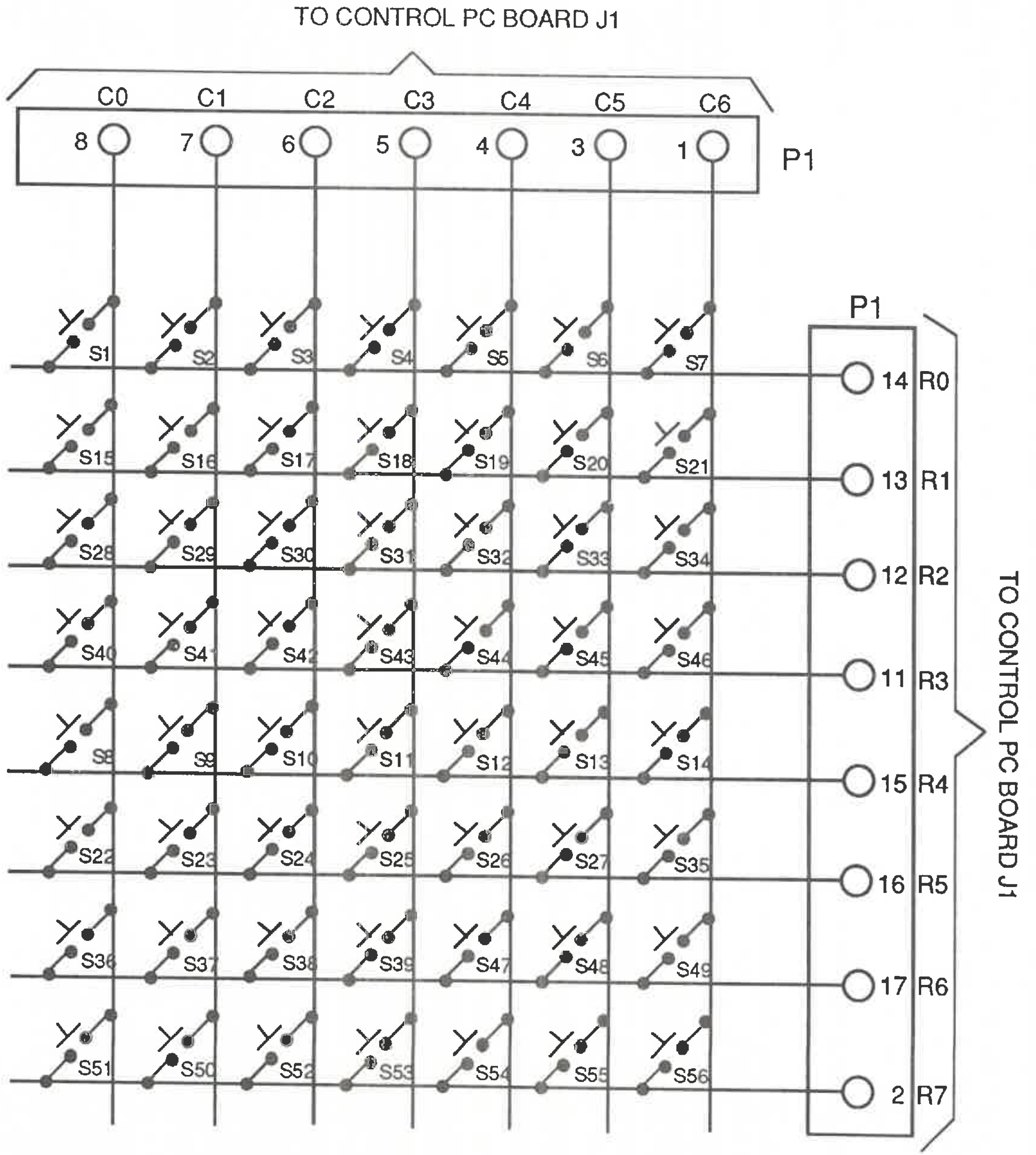

S = SWITCH
C = COLUMN
R = ROW

WIRING DIAGRAM

NON LCD MODELS

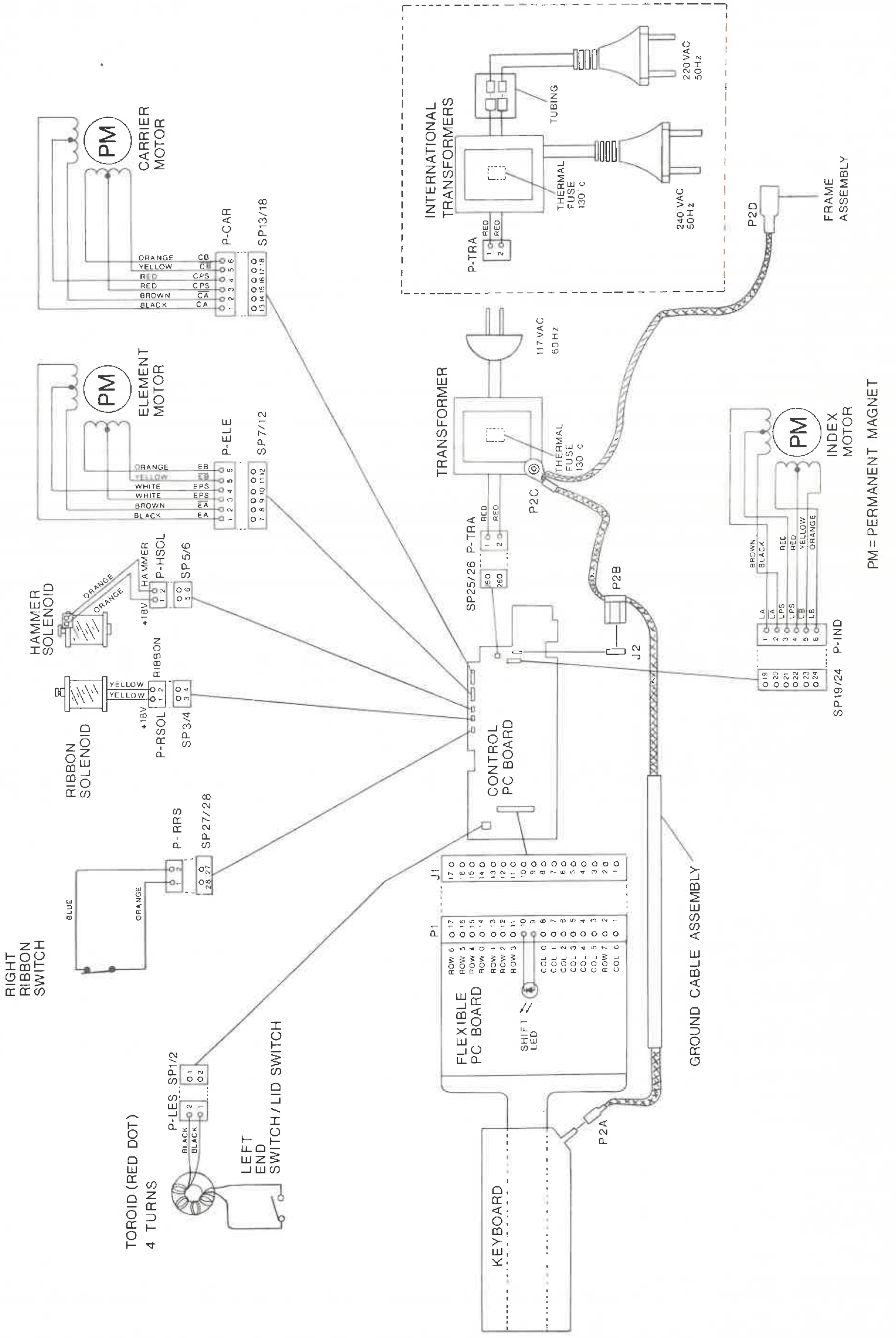

WIRE ROUTING

FRAMES
NON-LCD MODELS

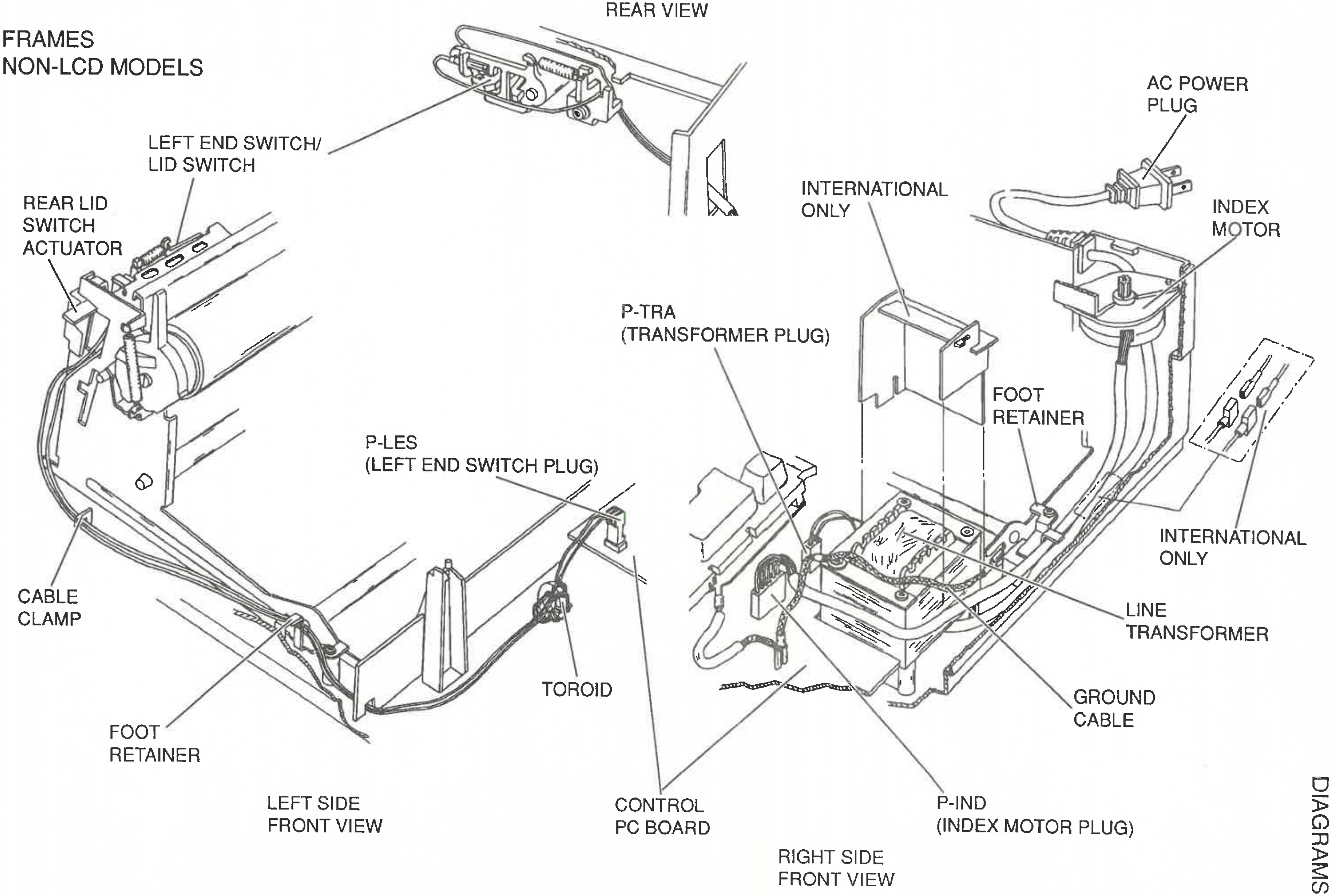

WIRE ROUTING

CARRIER

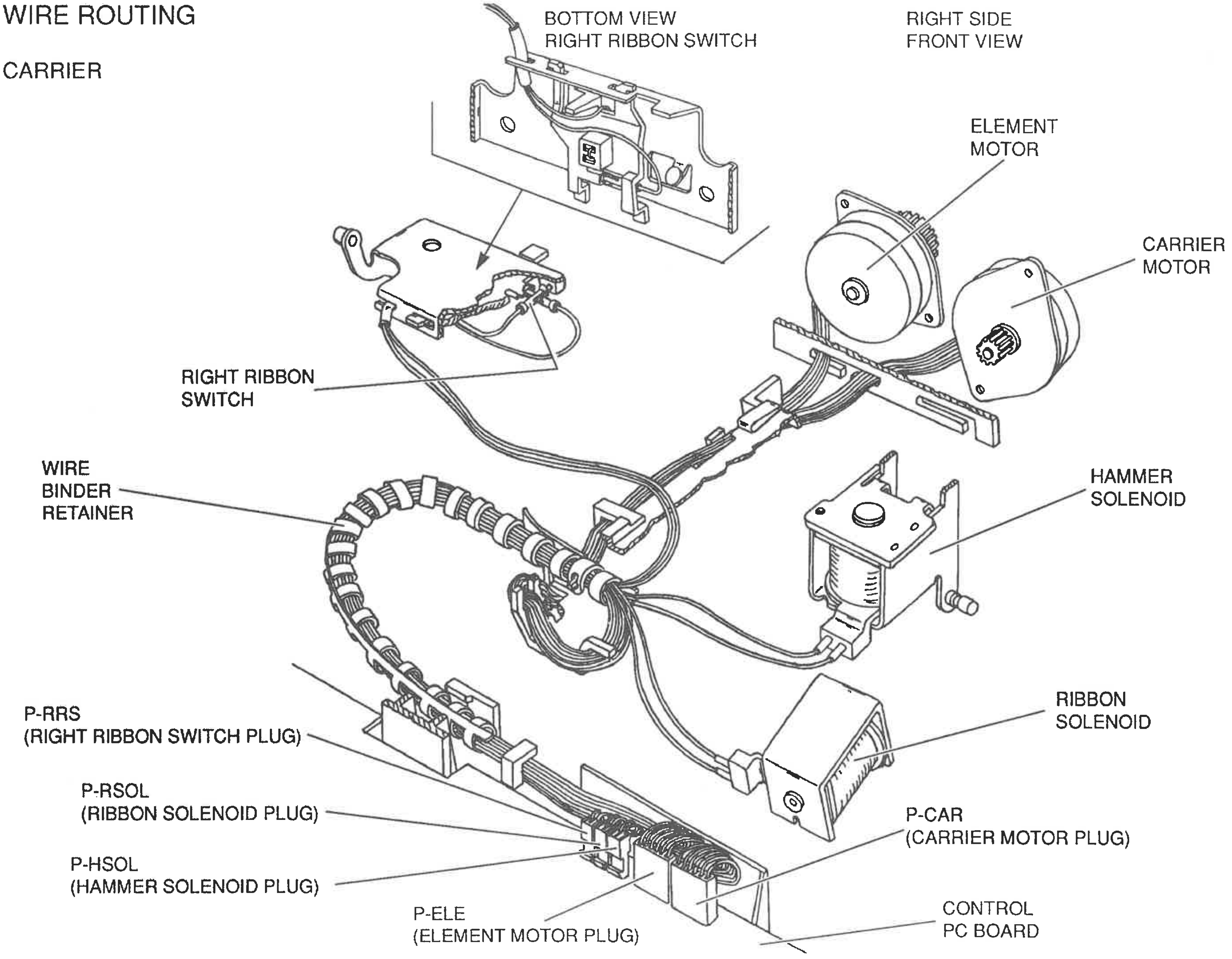

COMPONENT DIAGRAM

CONTROL PC BOARD
NON - LCD MODELS

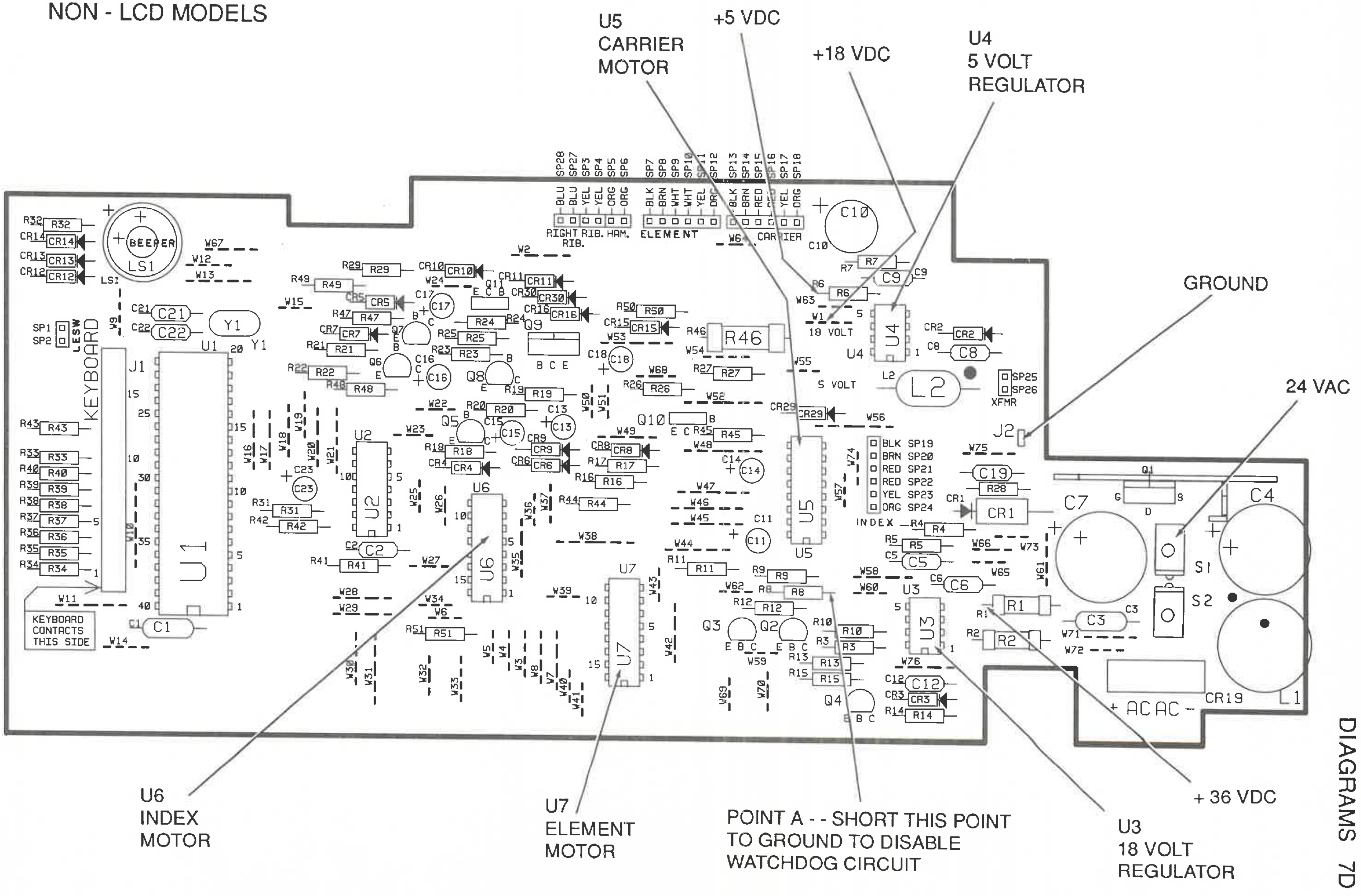

SCHEMATIC DIAGRAM

CONTROL PC BOARD
NON-LCD MODELS

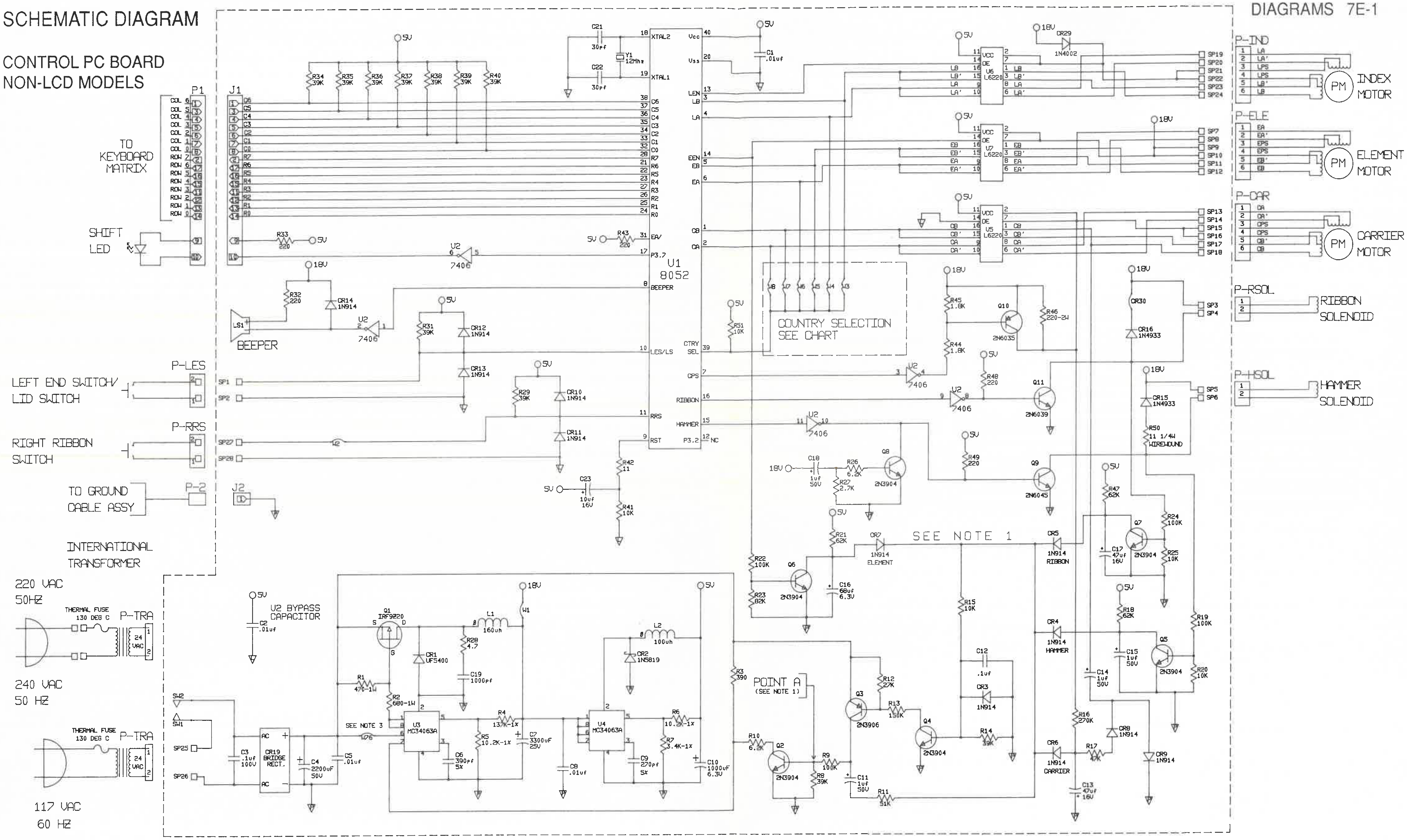

NOTES: 1) TO DISABLE WATCHDOG CIRCUIT, GROUND POINT A. SECTIONS OF THE WATCHDOG CAN BE INDIVIDUALY DISABLED TO ISOLATE DAMAGED COMPONENTS BY REMOVING THE INDIVIDUAL DIODE (CR4-7) ASSOCIATED WITH THAT PORTION OF THE CIRCUIT. CAUTION: DO NOT LEAVE MACHINE ENERGIZED FOR LONG PERIODS OF TIME WITH WATCHDOG DISABLED.

2) ⏚ EQUALS POWER GROUND, ⏚ EQUALS LOGIC GROUND

3) W76 CAN ALSO BE AN 11 ohm RESISTOR

4) ALL RESISTOR VALUES ARE IN OHMS

5) ALL RESISTORS ARE 1/4 WATT UNLESS OTHERWISE NOTED

*NOTE: USE APPROPRIATE JUMPER WIRE AND SOFTWARE (U1) COMBINATION FOR DESIRED LANGUAGE. SEE PARTS MANUAL FOR SOFTWARE (U1) PART NUMBERS.

COUNTRY SELECTION CHART *

COUNTRY	W3	W4	W5	W6	W7	W8
USA, CAN, SPAN/AM FRANCE, MEXICO GERMAN, AUSTRIA BELGIUM, S'PORE	OUT	OUT	OUT	OUT	OUT	OUT
AUSTRALIA, UK	IN	OUT	OUT	OUT	OUT	OUT
SWISS/GERMAN DENMARK	OUT	OUT	IN	OUT	OUT	OUT
SWISS/FRENCH NORWAY	OUT	OUT	OUT	IN	OUT	OUT
FRENCH/CAN NETHERLAND, SWEDEN USA (SEARS)	OUT	OUT	OUT	OUT	IN	OUT
ITALY, SPAIN	OUT	OUT	OUT	OUT	OUT	IN
PORTUGAL GERMANY (QUELLE)	OUT	IN	OUT	OUT	OUT	OUT

WAVE FORMS
NON-LCD MODELS

U5 PIN 8
CARRIER MOTOR PHASE A
10 V/div 10 msec/div

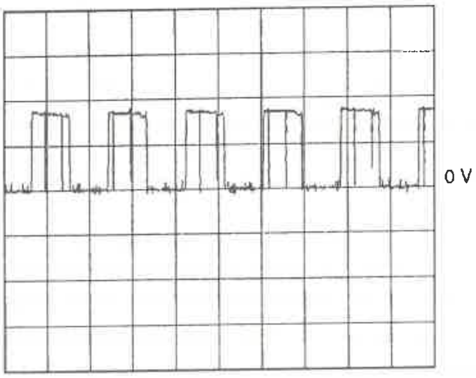

U7 PIN 8
ELEMENT MOTOR PHASE A
10 V/div 20 msec/div

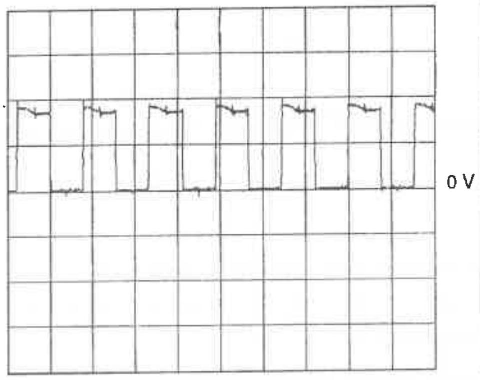

U6 PIN 8
INDEX MOTOR PHASE A
10 V/div 5 msec/div

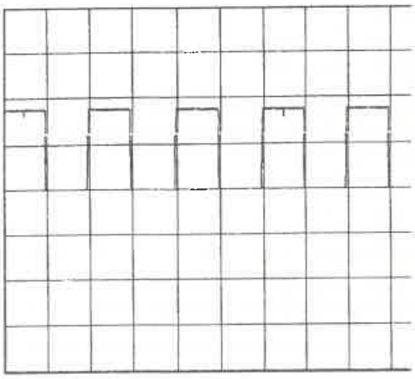

CR1 CATHODE
18 VOLT REGULATOR
10 V/div 20 µsec/div

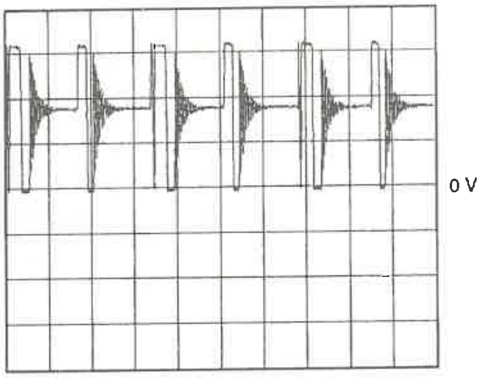

U3 PIN 1
18 VOLT REGULATOR
10 V/div 50 µsec/div

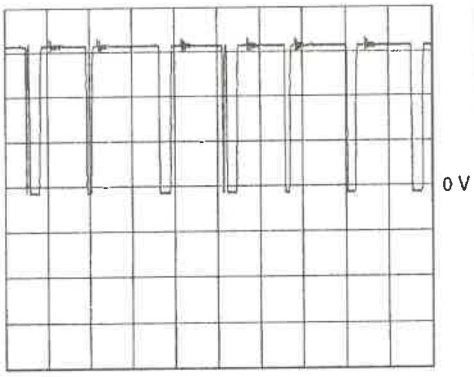

U4 PIN 2
5 VOLT REGULATOR
5 V/div 50 µsec/div

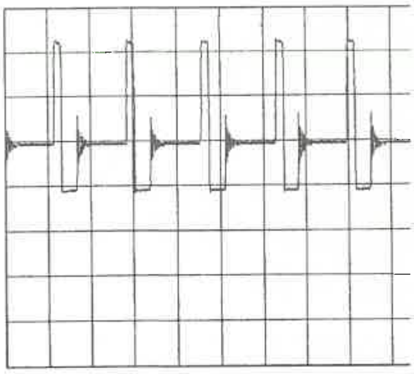

Q11 COLLECTOR
RIBBON SOLENOID PULSE
10 V/div 10 msec/div

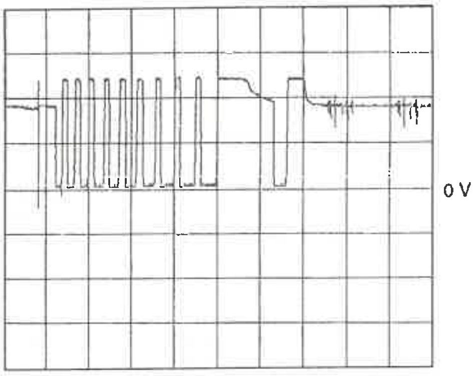

Q9 COLLECTOR
HAMMER SOLENOID PULSE
20 V/div 2 msec/div

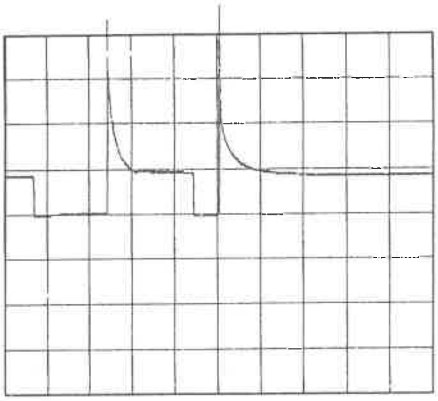

U1 PIN 21
KEYBOARD SCANNING
ROW 6
1 V/div 2msec/div

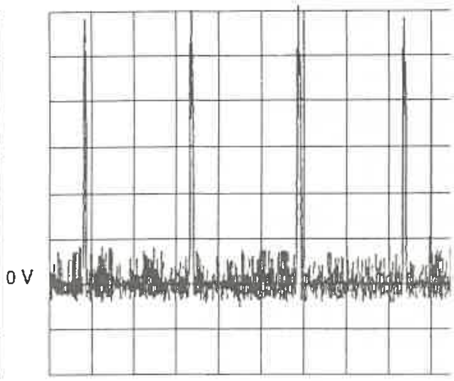

COMPONENT LAYOUT

COMPONENT SIDE
NON-LCD MODELS

COMPONENT LOCATION CHART

COMPONENT	LOCATION	COMPONENT	LOCATION	COMPONENT	LOCATION	COMPONENT	LOCATION	COMPONENT	LOCATION	COMPONENT	LOCATION
C1	B1	CR1	B4	L1	B5	R7	A4	R28	B4	R50	A3
C2	B2	CR2	A4	L2	A4	R8	B4	R29	A2	R51	B2
C3	B5	CR3	B4			R9	B4	R31	B2		
C4	B5	CR4	B2	Q1	B5	R10	B4	R32	A1	S1	B5
C5	B4	CR5	A2	Q2	B4	R11	B3	R33	A1	S2	B5
C6	B4	CR6	A3	Q3	B3	R12	B3	R34	B1		
C7	B5	CR7	A2	Q4	B4	R13	B4	R35	B1	U1	B1
C8	A4	CR8	A3	Q5	A2	R14	B4	R36	B1	U2	B2
C9	A4	CR9	A3	Q6	A2	R15	B4	R37	B1	U3	B4
C10	A4	CR10	A2	Q7	A2	R16	B3	R38	B1	U4	A4
C11	B3	CR11	A3	Q8	A2	R17	A3	R39	B1	U5	B4
C12	B4	CR12	A1	Q9	A3	R18	A2	R40	B1	U6	B2
C13	A3	CR13	A1	Q10	A3	R19	A3	R41	B2	U7	B3
C14	A3	CR14	A1	Q11	A2	R20	A2	R42	B2		
C15	A2	CR15	A3			R21	A2	R43	A1	Y1	A1
C16	A2	CR16	A3	R1	B4	R22	A2	R44	B3		
C17	A2	CR19	B5	R2	B4	R23	A2	R45	A3		
C18	A3	CR29	A4	R3	B4	R24	A2	R46	A3		
C19	A4	CR30	A3	R4	B4	R25	A2	R47	A2		
C21	A1			R5	B4	R26	A3	R48	A2		
C22	A1	LS1(BEEPER)	A1	R6	A4	R27	A3	R49	A4		
C23	B2										

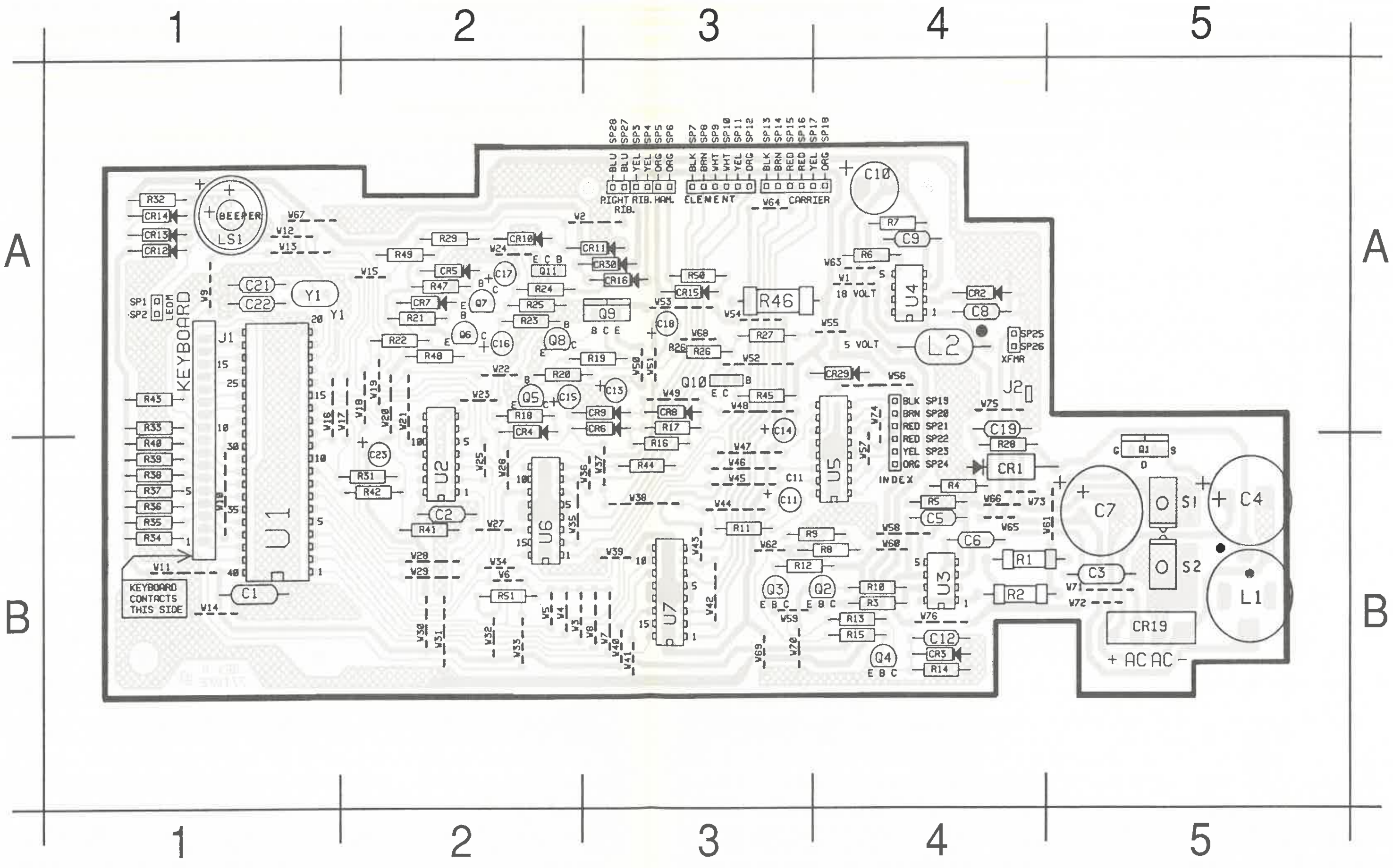

COMPONENT LAYOUT

SOLDER SIDE
NON-LCD MODELS

COMPONENT LOCATION CHART

COMPONENT	LOCATION
C1	B5
C2	B4
C3	B1
C4	B1
C5	B2
C6	B2
C7	B1
C8	A2
C9	A2
C10	A2
C11	B3
C12	B2
C13	A3
C14	A3
C15	A4
C16	A4
C17	A4
C18	A3
C19	A2
C21	A5
C22	A5
C23	B4

COMPONENT	LOCATION
CR1	B2
CR2	A2
CR3	B2
CR4	B4
CR5	A4
CR6	A3
CR7	A4
CR8	A3
CR9	A3
CR10	A4
CR11	A3
CR12	A5
CR13	A5
CR14	A5
CR15	A3
CR16	A3
CR19	B1
CR29	A2
CR30	A3
LS1(BEEPER)	A5

COMPONENT	LOCATION
L1	B1
L2	A2
Q1	B1
Q2	B2
Q3	B3
Q4	B2
Q5	A4
Q6	A4
Q7	A4
Q8	A4
Q9	A3
Q10	A3
Q11	A4
R1	B2
R2	B2
R3	B2
R4	B2
R5	B2
R6	A2

COMPONENT	LOCATION
R7	A2
R8	B2
R9	B2
R10	B2
R11	B3
R12	B3
R13	B2
R14	B2
R15	B2
R16	B3
R17	A3
R18	A4
R19	A3
R20	A4
R21	A4
R22	A4
R23	A4
R24	A4
R25	A4
R26	A3
R27	A3

COMPONENT	LOCATION
R28	B2
R29	A4
R31	B4
R32	A5
R33	A5
R34	B5
R35	B5
R36	B5
R37	B5
R38	B5
R39	B5
R40	B5
R41	B4
R42	B4
R43	A5
R44	B3
R45	A3
R46	A3
R47	A4
R48	A4
R49	A4

COMPONENT	LOCATION
R50	A3
R51	B4
S1	B1
S2	B1
U1	B5
U2	B4
U3	B2
U4	A2
U5	B2
U6	B4
U7	B3
Y1	A5

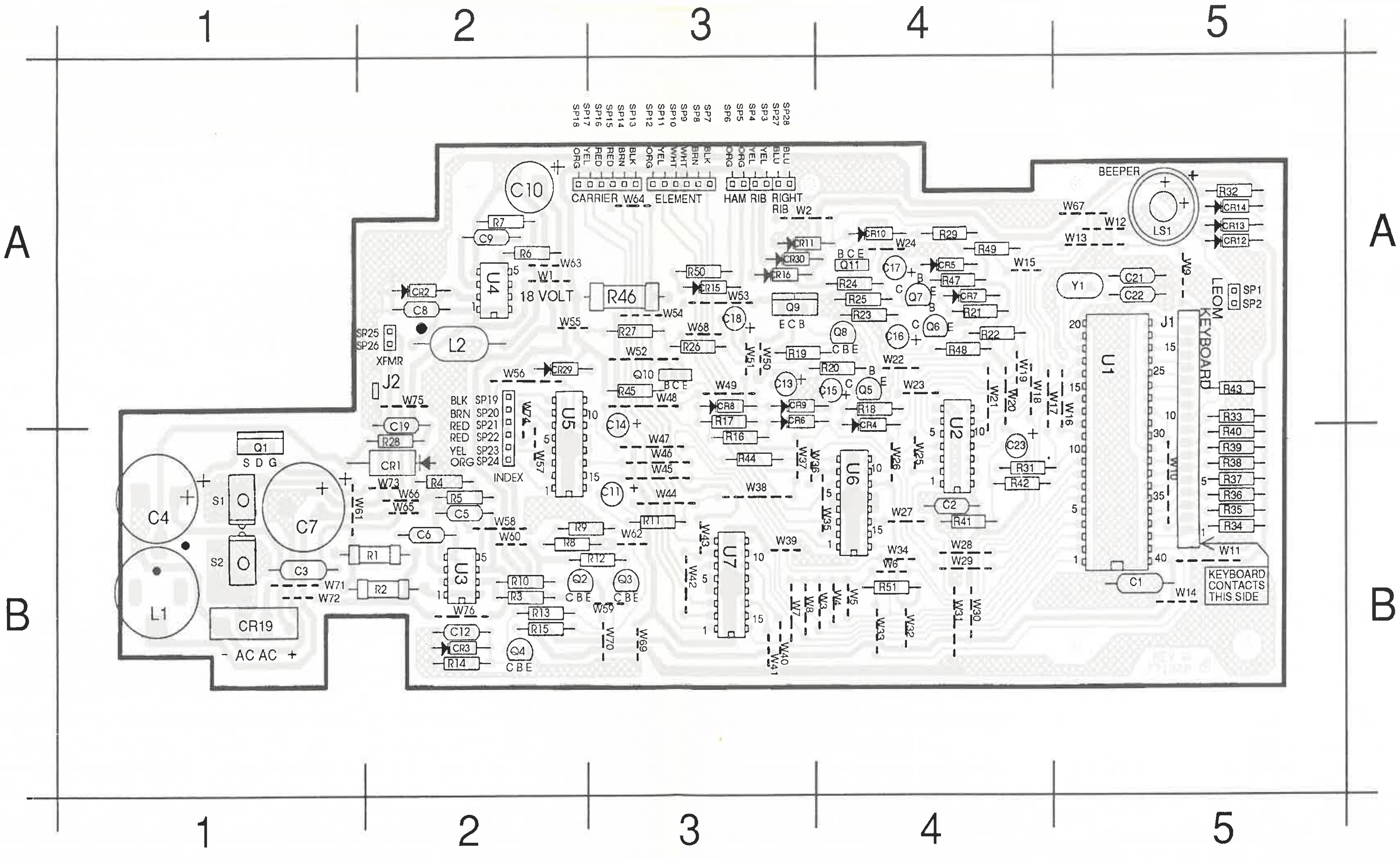

WAVE FORMS
MODELS WITHOUT DICTIONARY

U7 PIN 8
CARRIER MOTOR PHASE A
10 V/div 10 msec/div

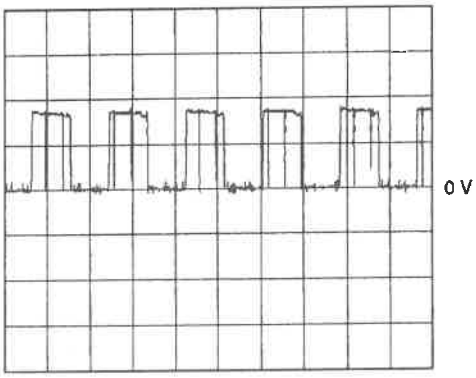

U6 PIN 8
ELEMENT MOTOR PHASE A
10 V/div 20 msec/div

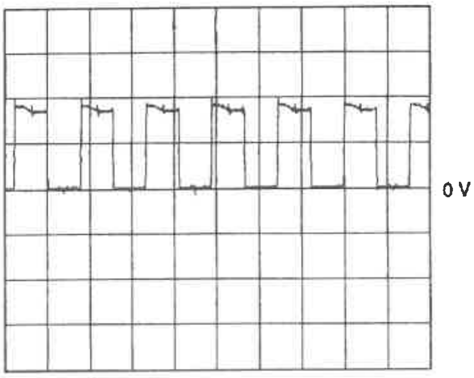

U5 PIN 8
INDEX MOTOR PHASE
10 V/div 5 msec/div

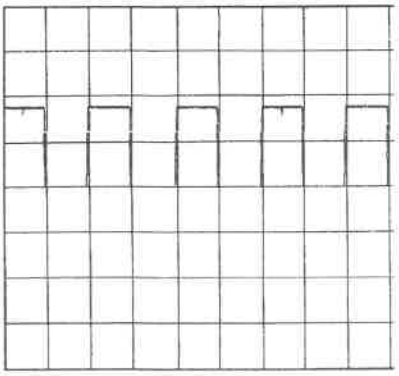

CR1 CATHODE
18 VOLT REGULATOR
10 V/div 20 µsec/div

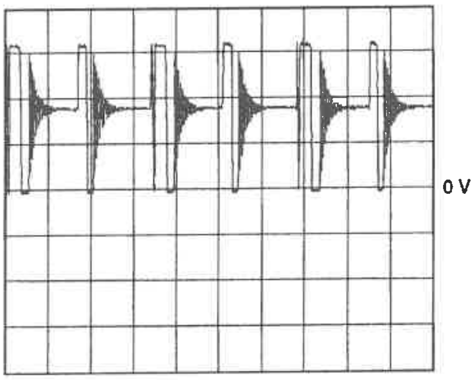

U3 PIN 1
18 VOLT REGULATOR
10 V/div 50 µsec/div

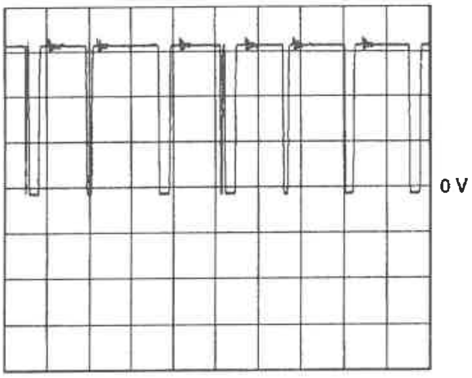

U4 PIN 2
5 VOLT REGULATOR
5 V/div 50 µsec/div

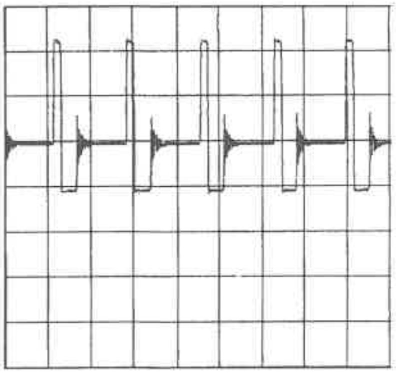

Q11 COLLECTOR
RIBBON SOLENOID PULSE
10 V/div 10 msec/div

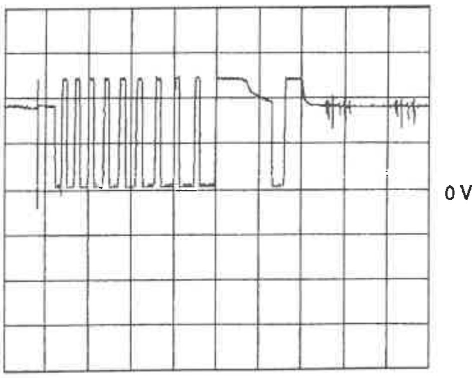

Q9 DRAIN
HAMMER SOLENOID PULSE
20 V/div 2 msec/div

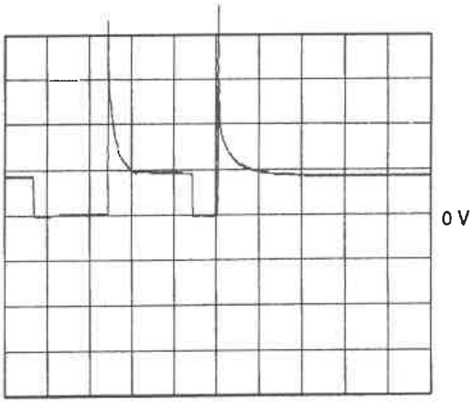

U1 PIN 21
KEYBOARD SCANNING
ROW 6
2 V/div 2msec/div

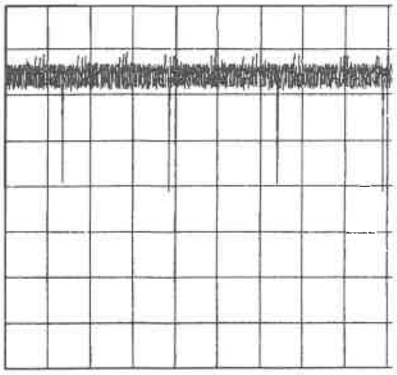

SECTION 8

DIAGRAMS

MODELS WITH DICTIONARY

		PAGE NUMBER
8A	KEYBOARD DIAGRAMS	
	Keyboard Layout Chart	7A-2
	Keyboard Matrix Diagram	7A-3
8B	WIRING DIAGRAM	7B-1
8C	WIRE ROUTING	
	Frames	7C-1
	Carrier	7C-2
→ 8D	COMPONENT DIAGRAM	
	Control PC Board -- Double Sided	8D-1
	Control PC Board -- Single Sided	8D-2
→ 8E	SCHEMATIC DIAGRAM	
	Double Sided PC Board	8E-1
	Single Sided PC Board	8E-2

SECTION 8

DIAGRAMS

LCD MODELS

		PAGE NUMBER
8A	KEYBOARD DIAGRAMS	
	Keyboard Layout Chart	8A-2
	Keyboard Matrix Diagram	8A-3
8B	WIRING DIAGRAM	8B-1
8C	WIRE ROUTING	
	Frames	8C-1
	Carrier	8C-2
8D	COMPONENT DIAGRAM	
	Control PC Board	8D-1
8E	SCHEMATIC DIAGRAM	8E-1
8F	WAVE FORMS	8F-1 & 8F-2
8G	COMPONENT LAYOUTS	
	Component Side	8G-1
	Solder Side	8G-2

KEYBOARD LAYOUT CHART

LCD MODELS

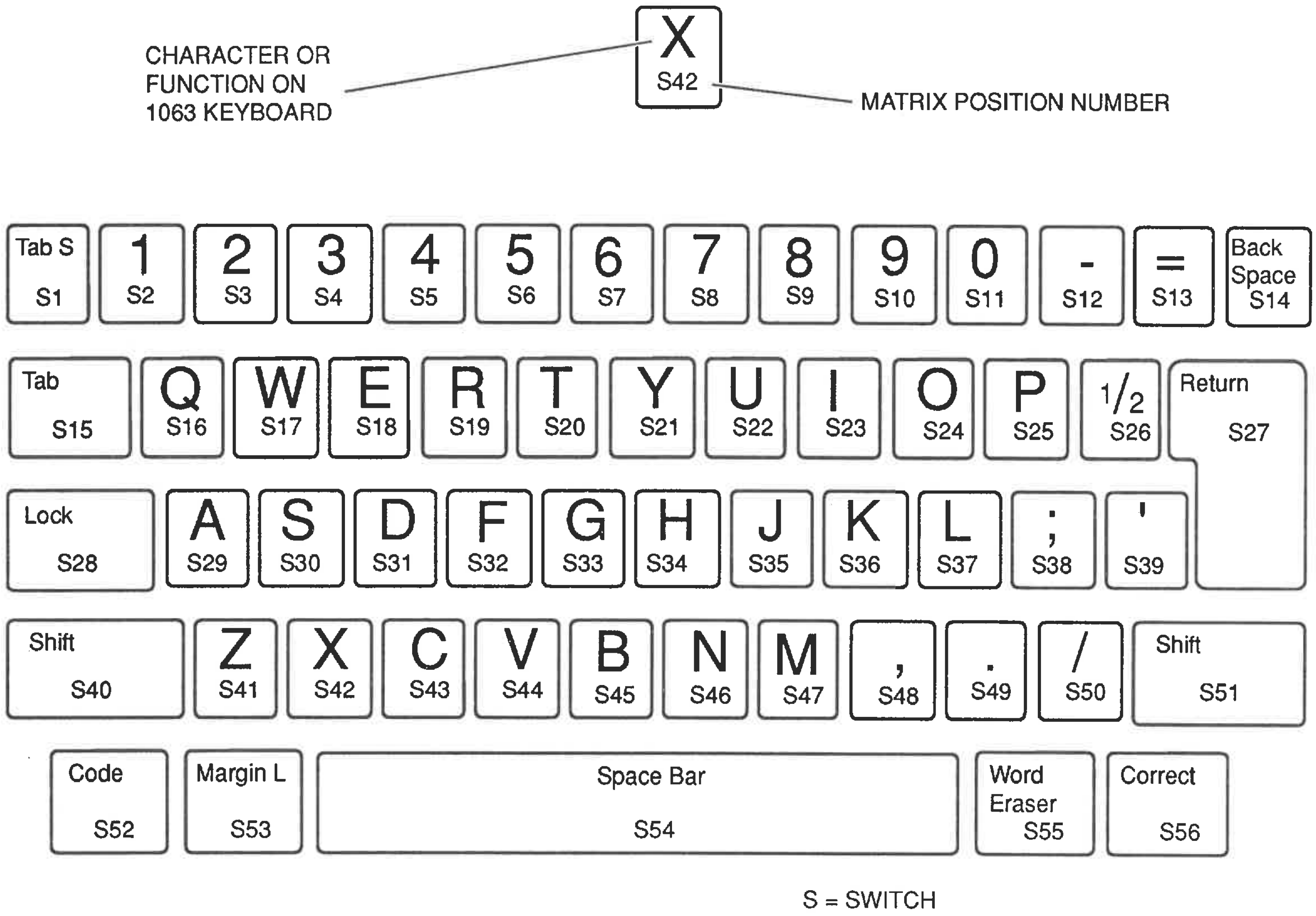

KEYBOARD MATRIX

LCD MODELS

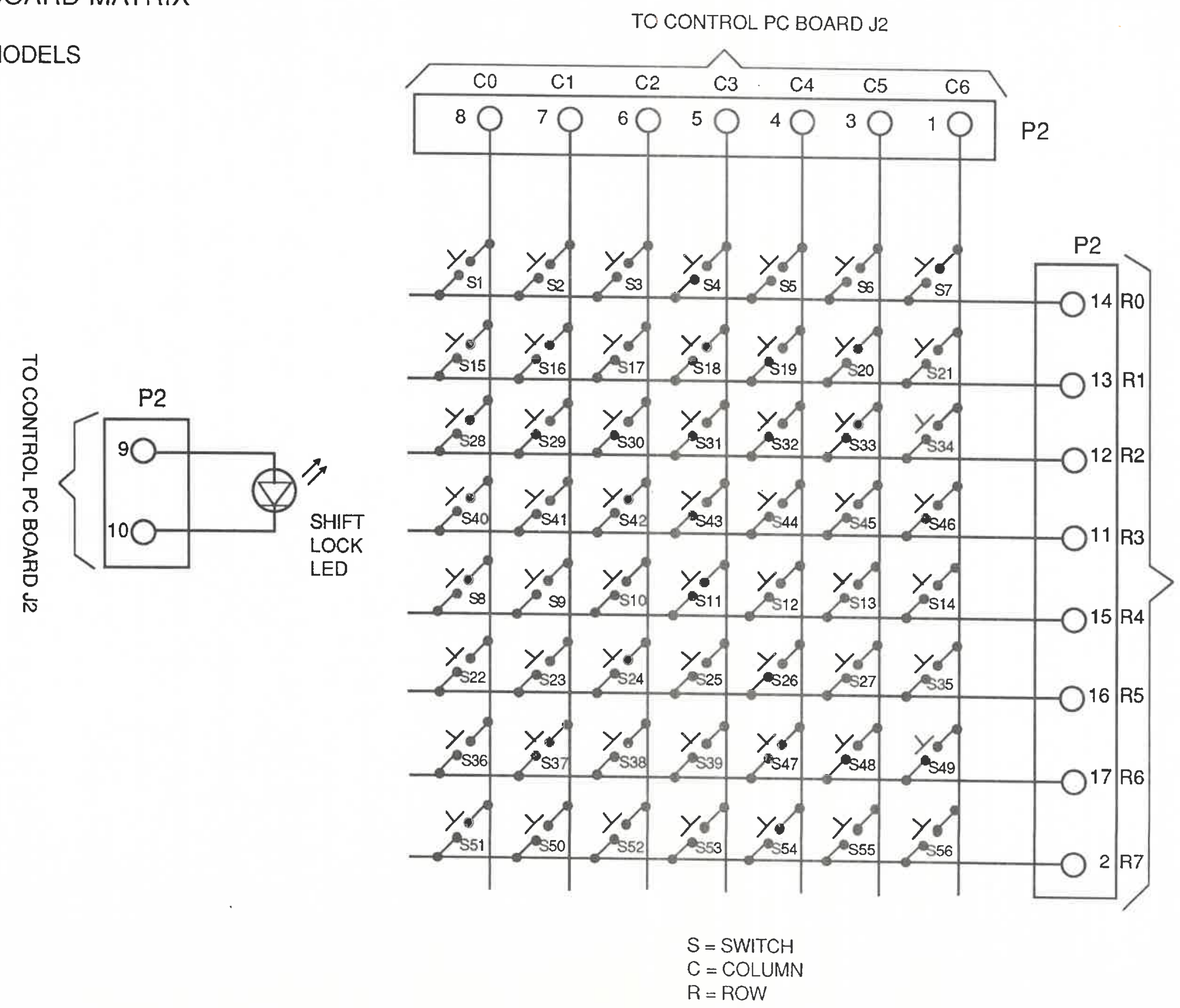

SCHEMATIC DIAGRAM

CONTROL PC BOARD
LCD MODELS

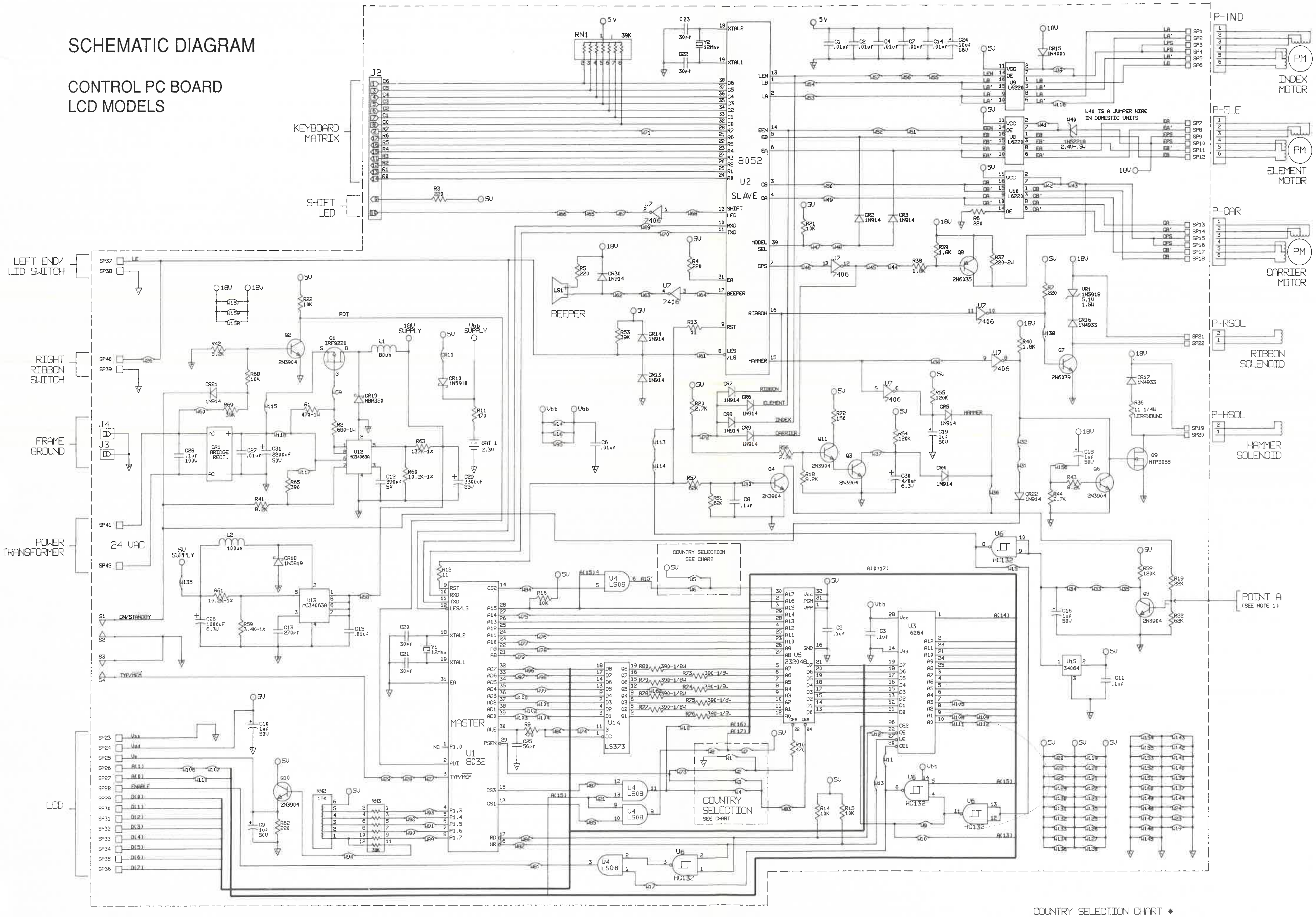

NOTES: 1) TO DISABLE WATCH DOG CIRCUIT, GROUND POINT A. SECTIONS OF THE WATCHDOG CAN BE INDIVIDUALY DISABLED TO ISOLATE DAMAGED COMPONENTS BY REMOVING THE INDIVIDUAL DIODE (CR5-9) ASSOCIATED WITH THAT PORTION OF THE CURCUIT. CAUTION: DO NOT LEAVE MACHINE ENERGIZED FOR LONG PERIODS OF TIME WITH WATCHDOG DISABLED.

2) ⏚ EQUALS POWER GROUND, ⏚ EQUALS LOGIC GROUND
3) ALL RESISTOR VALUES ARE IN OHMS
4) ALL RESISTORS ARE 1/4 WATT UNLESS OTHERWISE NOTED
5) ALL RESISTORS ARE 5% TOLERANCE UNLESS OTHERWISE NOTED

* NOTE: USE APPROPRIATE JUMPER WIRE AND SOFTWARE (U5) COMBINATION FOR DESIRED LANGUAGE. SEE PARTS MANUAL FOR SOFTWARE (U5) PART NUMBERS.

COUNTRY SELECTION CHART *

COUNTRY	W1	W2	W3	W4	W5	W6	W7	W8
USA, CAN/AM	OUT	IN	OUT	IN	OUT	IN	IN	OUT
ALL OTHERS	IN	OUT	IN	OUT	OUT	IN	OUT	IN

SCHEMATIC DIAGRAM

MODELS WITH DICTIONARY

SINGLE SIDED PC BOARD

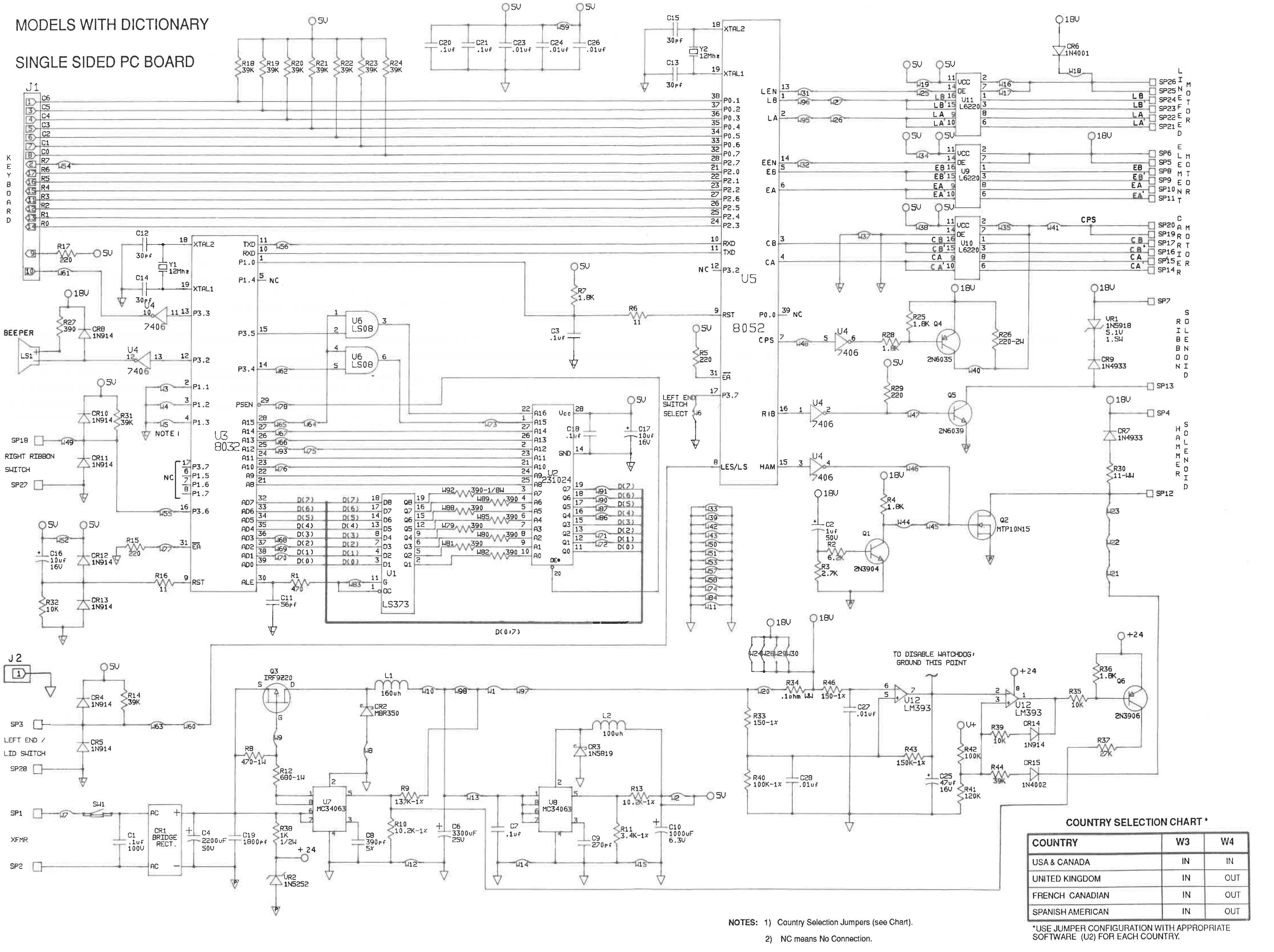

NOTES: 1) Country Selection Jumpers (see Chart).

2) NC means No Connection.

COUNTRY SELECTION CHART *

COUNTRY	W3	W4
USA & CANADA	IN	IN
UNITED KINGDOM	IN	OUT
FRENCH CANADIAN	IN	OUT
SPANISH AMERICAN	IN	OUT

*USE JUMPER CONFIGURATION WITH APPROPRIATE SOFTWARE (U2) FOR EACH COUNTRY.

WIRING DIAGRAM LCD MODELS

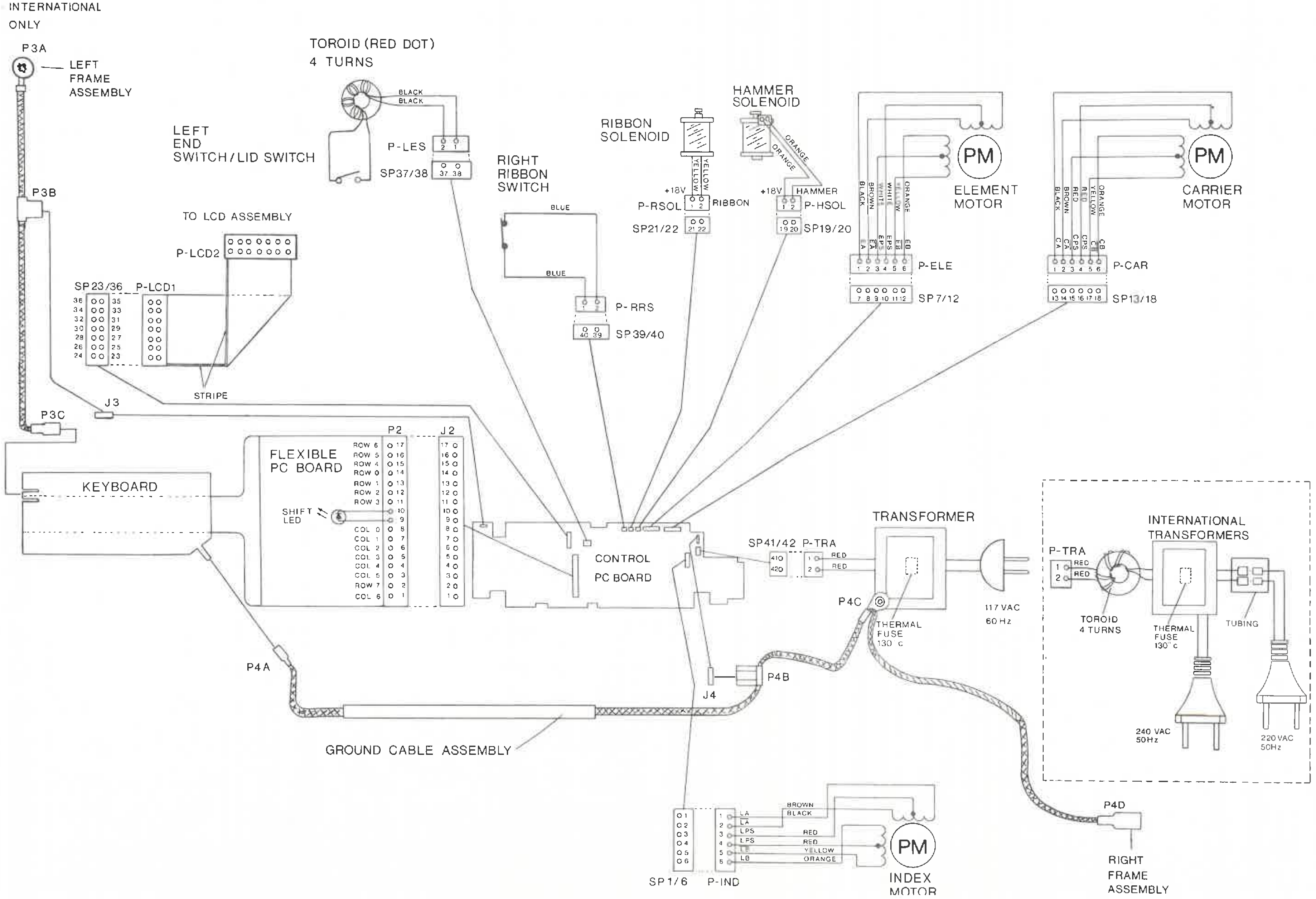

COMPONENT LAYOUT

COMPONENT SIDE
LCD MODELS

COMPONENT LOCATION CHART

COMPONENT	LOCATION	COMPONENT	LOCATION	COMPONENT	LOCATION	COMPONENT	LOCATION	COMPONENT	LOCATION	COMPONENT	LOCATION	COMPONENT	LOCATION
BAT1	A3	C22	A3	CR14	A3	Q8	A4	R20	B4	R62	A2	S4	B5
		C23	A3	CR15	A4	Q9	A4	R21	B3	R63	B4	VR1	A4
C1	B2	C24	A1	CR16	A4	Q10	A3	R22	B4	R65	B4		
C2	B3	C25	A2	CR17	A4	Q11	B4	R36	A4	R67	B5	U1	B2
C3	A1	C26	A4	CR18	A5			R37	A4	R68	B4	U2	A3
C4	A1	C27	A5	CR19	B5	R1	B4	R38	A4	R69	B4	U3	B1
C5	B1	C28	A5			R2	B4	R39	A4	R72	B4	U4	A1
C6	A1	C29	B5	CR21	B4	R3	B2	R40	A4	R73	B2	U5	B1
C7	A3	C30	B3	CR22	B4	R4	A3	R41	B4	R74	B2	U6	A1
C8	A4	C31	A5	CR30	A3	R5	A3	R42	B4	R75	B1	U7	A3
C9	A2					R6	B4	R43	A4	R76	B1	U8	B4
C10	A2	CR1	B5	LS1(BEEPER)	A3	R7	A4	R44	A4	R77	B1	U9	A4
C11	A2	CR2	B3			R8	A3	R51	A3	R78	B1	U10	B4
C12	B4	CR3	B3	L1	B5	R9	B2	R52	A3	R79	B2	U12	B4
C13	A4	CR4	B3	L2	A4	R10	B1	R53	A3	R80	A2	U13	A4
C14	B1	CR5	B3			R11	A3	R54	B3			U14	B1
C15	A5	CR6	B3	Q1	B5	R12	B2	R55	B3	RN1	B3	U15	A2
C16	A2	CR7	B3	Q2	B4	R13	B2	R56	B4	RN2	B2		
C17	B5	CR8	B3	Q3	B4	R14	A1	R57	A3	RN3	B2	Y1	A2
C18	A4	CR9	B3	Q4	B3	R15	A1	R58	A3			Y2	A3
C19	A3	CR10	A3	Q5	A3	R16	A1	R59	A4	S1	B5		
C20	B2	CR11	A3	Q6	A4	R18	B4	R60	B4	S2	B5		
C21	A2	CR13	A3	Q7	A4	R19	A4	R61	A4	S3	B5		

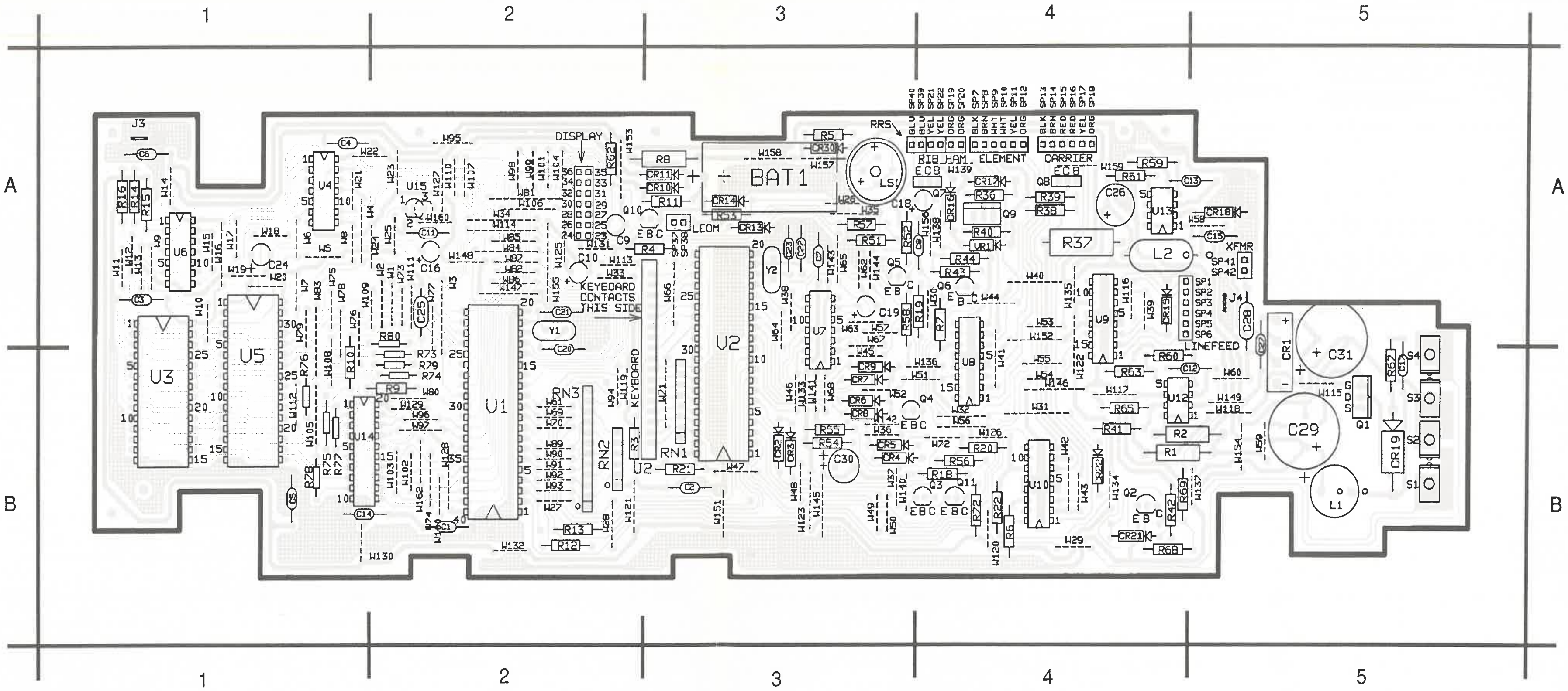

COMPONENT LAYOUT

SOLDER SIDE LCD MODELS

COMPONENT LOCATION CHART

COMPONENT	LOCATION
BAT1	A3
C1	B4
C2	B3
C3	A5
C4	A5
C5	B5
C6	A5
C7	A3
C8	A2
C9	A4
C10	A4
C11	A4
C12	B2
C13	A2
C14	B5
C15	A1
C16	A4
C17	B1
C18	A2
C19	A3
C20	B4
C21	A4

COMPONENT	LOCATION
C22	A3
C23	A3
C24	A5
C25	A4
C26	A2
C27	A1
C28	A1
C29	B1
C30	B3
C31	A1
CR1	B1
CR2	B3
CR3	B3
CR4	B3
CR5	B3
CR6	B3
CR7	B3
CR8	B3
CR9	B3
CR10	A3
CR11	A3
CR13	A3

COMPONENT	LOCATION
CR14	A3
CR15	A2
CR16	A2
CR17	A2
CR18	A1
CR19	B1
CR21	B2
CR22	B2
CR30	A3
LS1(BEEPER)	A3
L1	B1
L2	A2
Q1	B1
Q2	B2
Q3	B2
Q4	B3
Q5	A3
Q6	A2
Q7	A2

COMPONENT	LOCATION
Q8	A2
Q9	A2
Q10	A3
Q11	B2
R1	B2
R2	B2
R3	B4
R4	A3
R5	A3
R6	B2
R7	A2
R8	A3
R9	B4
R10	B5
R11	A3
R12	B4
R13	B4
R14	A5
R15	A5
R16	A5
R18	B2
R19	A2

COMPONENT	LOCATION
R20	B2
R21	B3
R22	B2
R36	A2
R37	A2
R38	A2
R39	A2
R40	A2
R41	B2
R42	B2
R43	A2
R44	A2
R51	A3
R52	A3
R53	A3
R54	B3
R55	B3
R56	B2
R57	A3
R58	A3
R59	A2
R60	B2
R61	A2

COMPONENT	LOCATION
R62	A4
R63	B2
R65	B2
R67	B1
R68	B2
R69	B2
R72	B2
R73	B4
R74	B4
R75	B5
R76	B5
R77	B5
R78	B5
R79	B4
R80	A4
RN1	B3
RN2	B4
RN3	B4
S1	B1
S2	B1
S3	B1

COMPONENT	LOCATION
S4	B1
VR1	A2
U1	B4
U2	A3
U3	B5
U4	A5
U5	B5
U6	A5
U7	A3
U8	B2
U9	A2
U10	B2
U12	B2
U13	A2
U14	B5
U15	A4
Y1	A4
Y2	A3

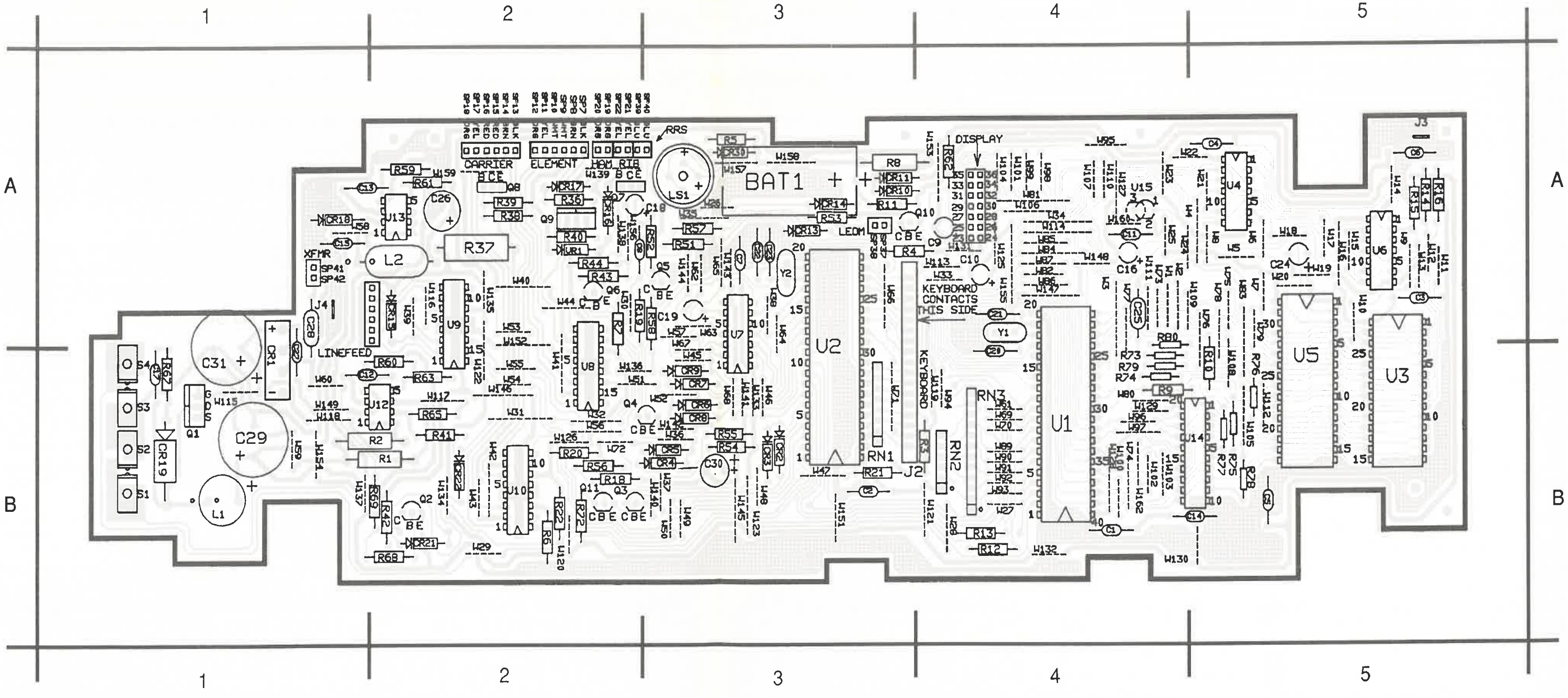

WIRE ROUTING

FRAMES
LCD MODELS

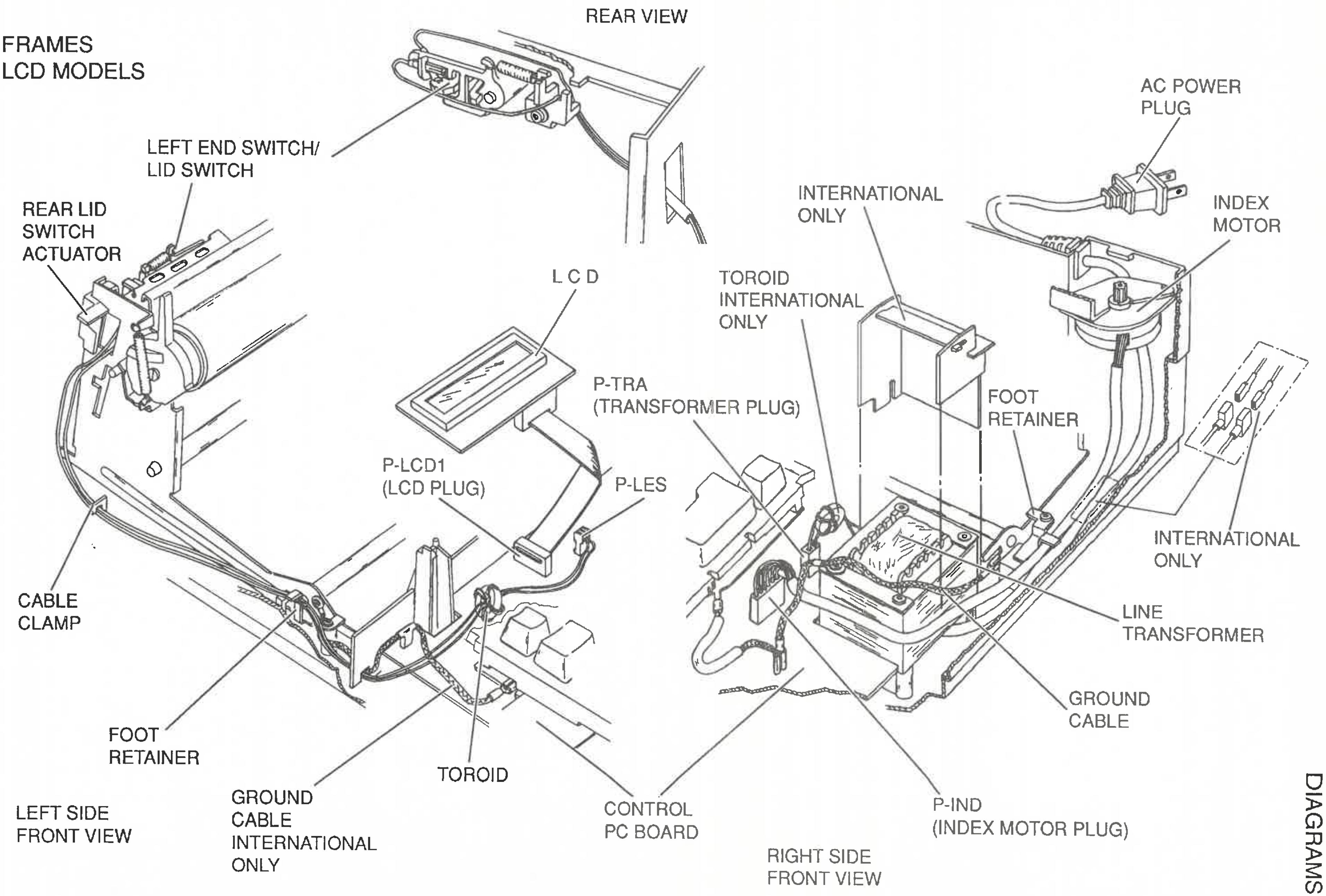

WIRE ROUTING

CARRIER

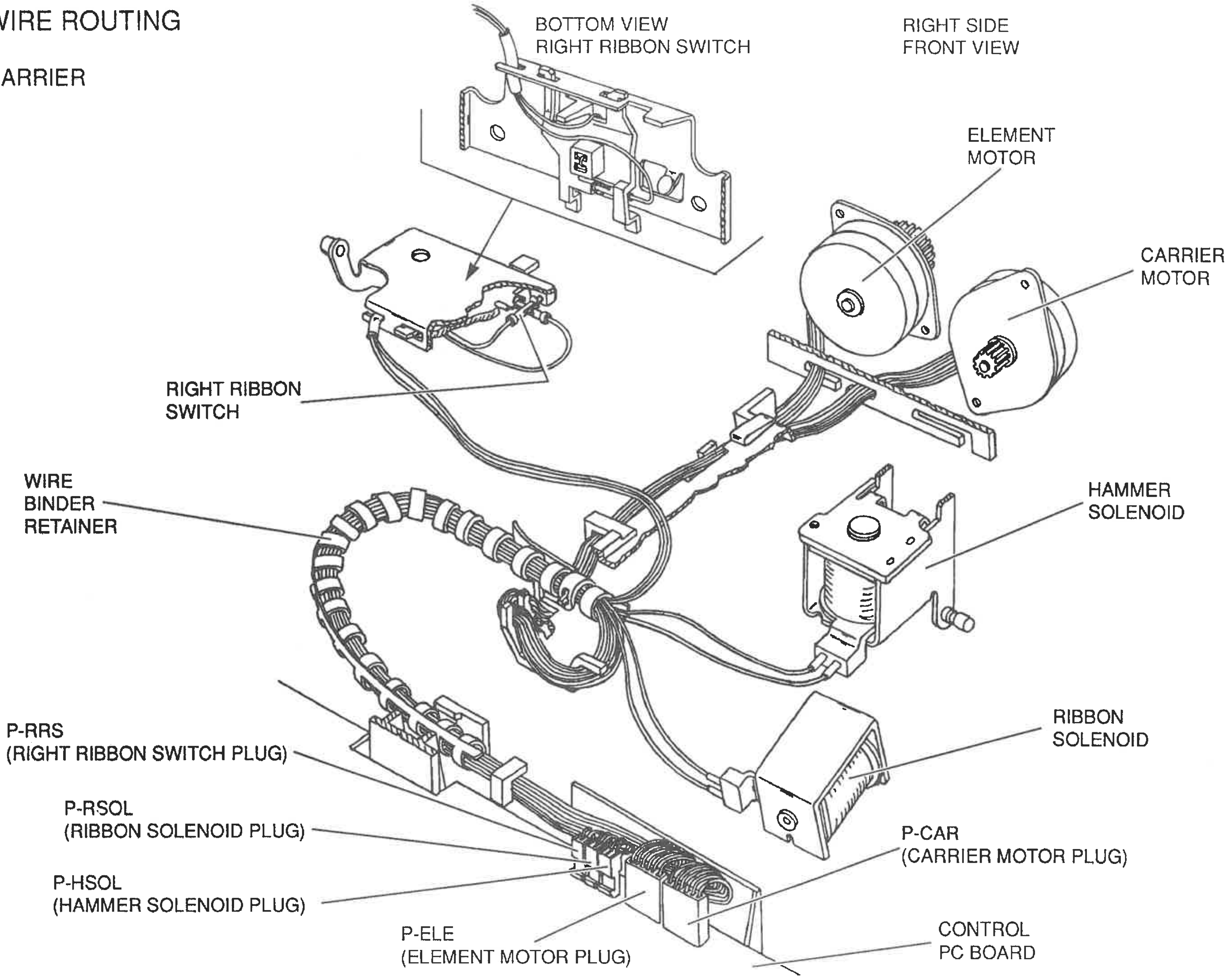

COMPONENT DIAGRAM

CONTROL PC BOARD-DOUBLE SIDED MODELS WITH DICTIONARY

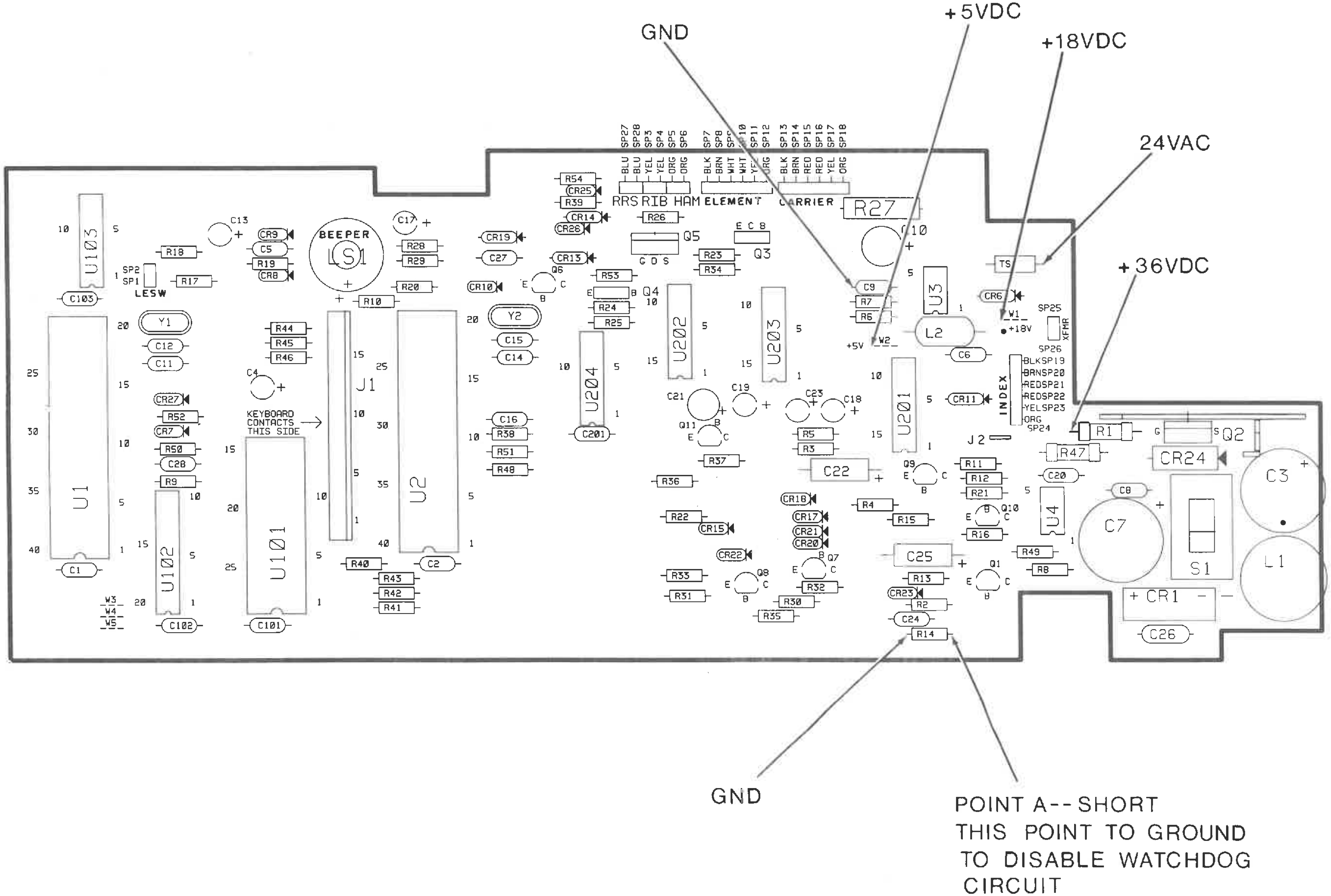

COMPONENT DIAGRAM
CONTROL PC BOARD - SINGLE SIDED MODELS WITH DICTIONARY

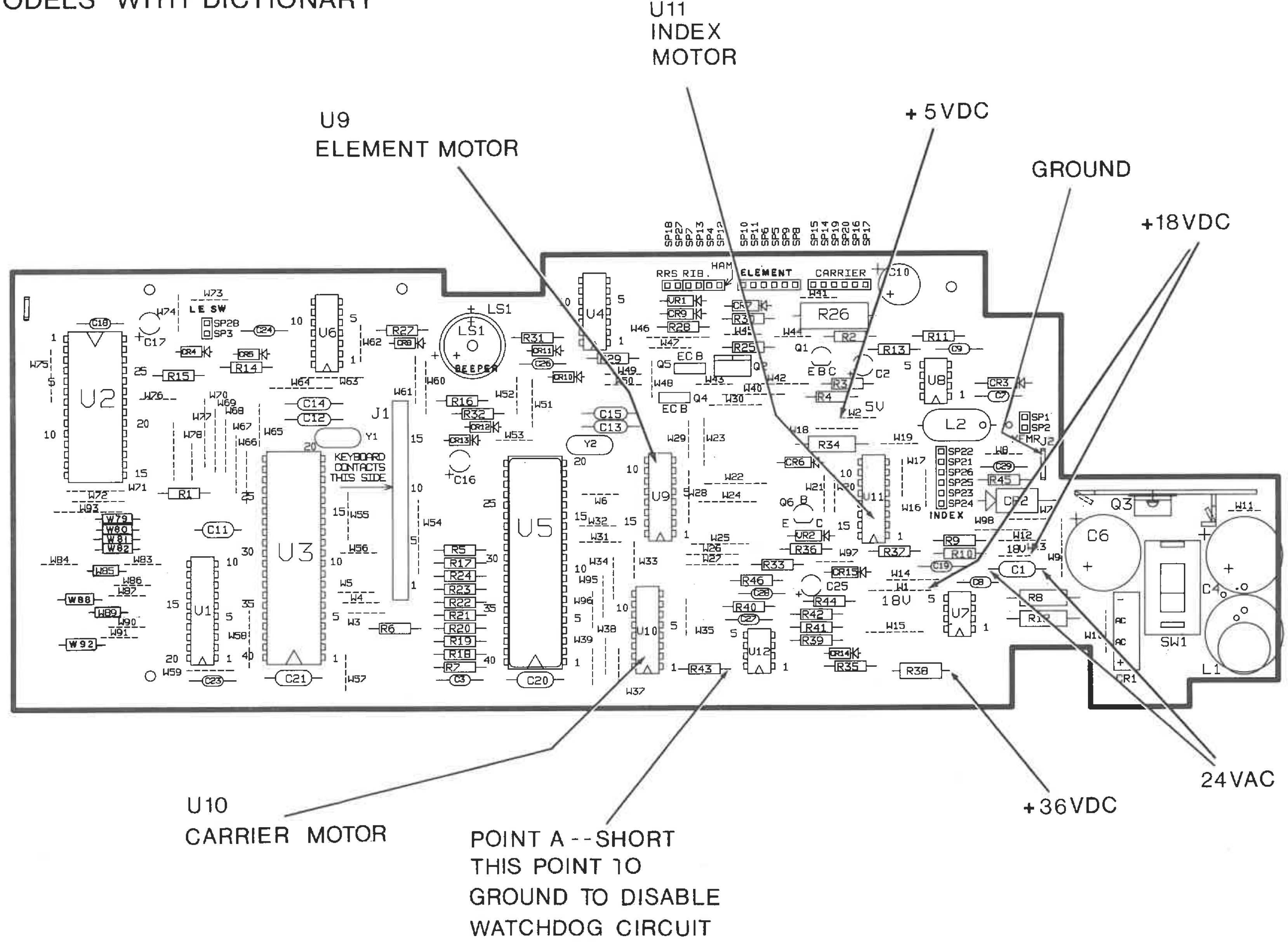

WAVE FORMS
LCD MODELS

U12 PIN 1
18 VOLT REGULATOR
10 V/div 50 µsec/div

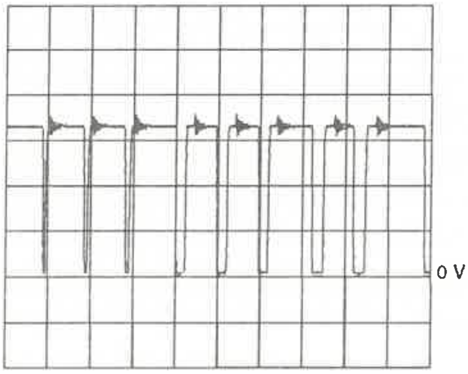

Q1 DRAIN
18 VOLT REGULATOR
10 V/div .1 msec/div

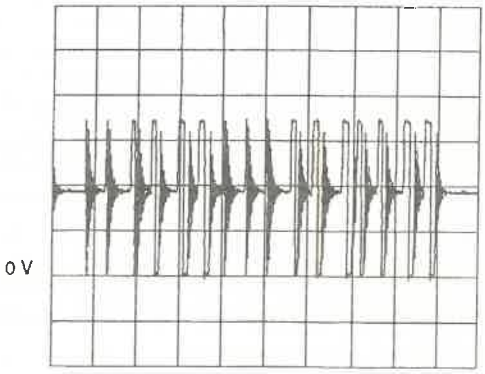

U13 PIN 2
5 VOLT REGULATOR
5V/div 50 µsec/div

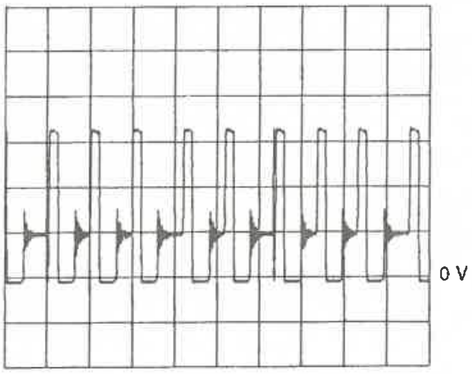

U10 PIN 8
CARRIER MOTOR PHASE A
10V/div 10 msec/div

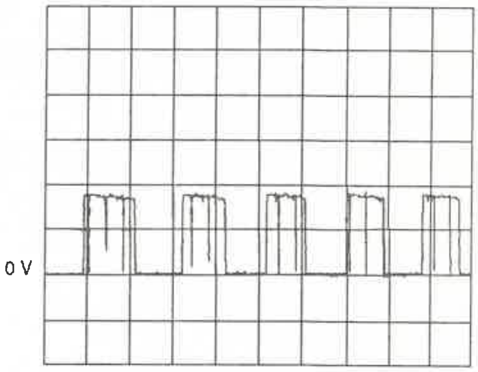

U8 PIN 8
ELEMENT MOTOR PHASE A
10 V/div 20 msec/div

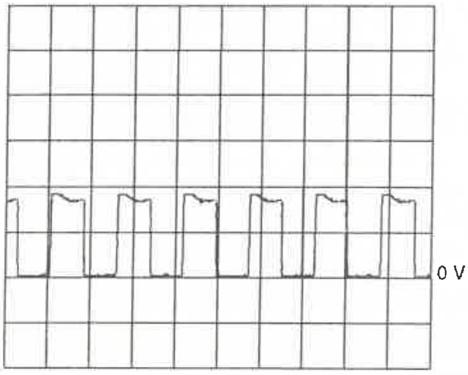

U9 PIN 8
INDEX MOTOR PHASE A
10V/div 5msec/div

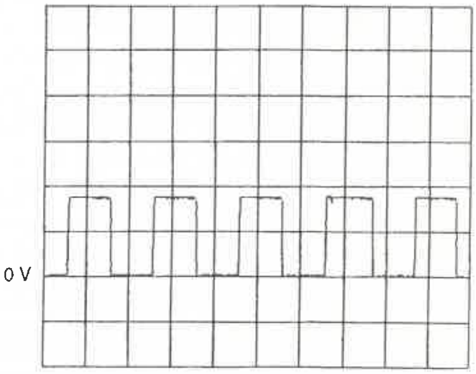

WAVE FORMS
LCD MODELS

Q7 COLLECTOR
RIBBON SOLENOID PULSE
10 V/div 10 msec/div

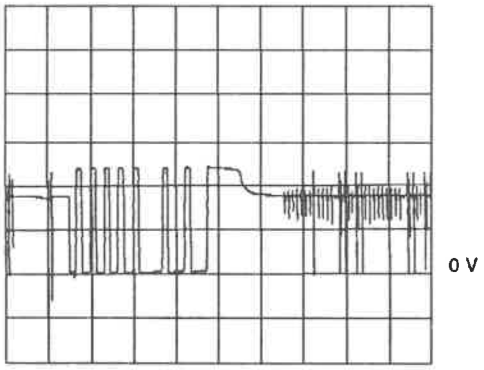

Q9 DRAIN
HAMMER SOLENOID PULSE
20 V/div 2msec/div

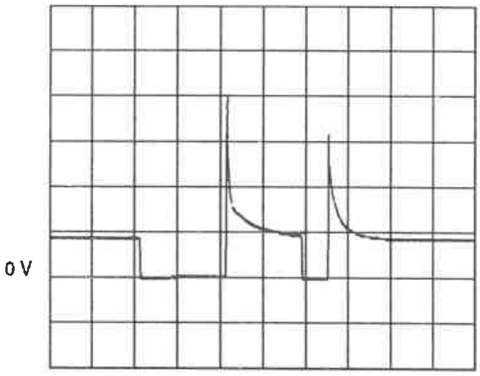

C16 POSITIVE TERMINAL
WATCHDOG TRIPPING
1V/div 10 msec/div

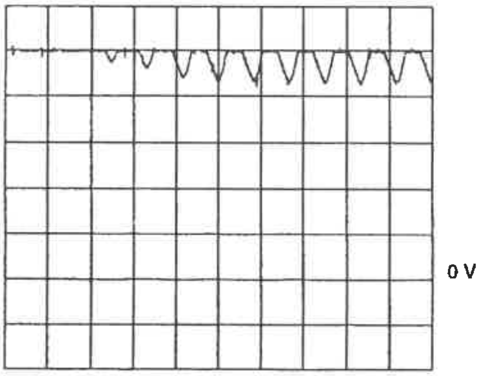

U6 PIN 8
WATCHDOG TRIPPING
2 V/div 2 msec/div

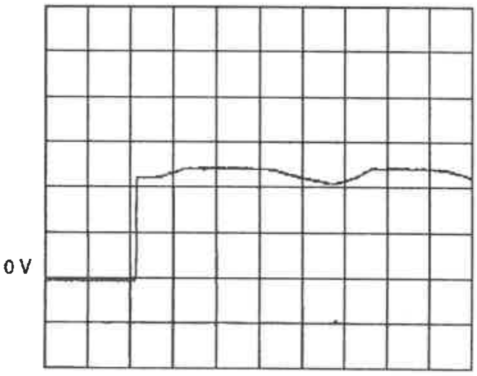

U2 PIN 21
KEYBOARD SCANNING
ROW 6
2 V/div 2 msec/div

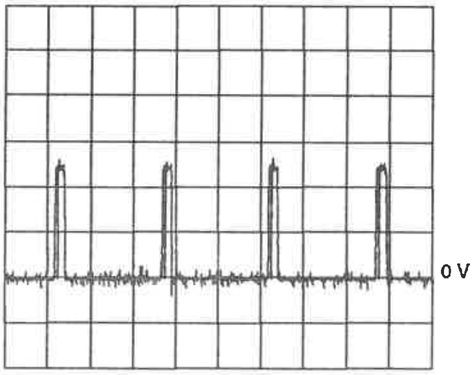

SMITH CORONA

5A SERIES
VERSION 2 MODELS

XL1500 (5AEE)
SL500 (5ACE)
Mark VI (5AWE)
CXL 4200 (5APE)
300 DLE (5ADD)
Deville 450 (5AKD)
Premier 100 (5AGB)

XD4600 (5AEF)
SD650 (5ACF)
Mark XII (5AWF)
CXL 5100 (5APF)
400 DLD (5ADE)
DX4000 (5ASG)

COMMITMENT TO EXCELLENCE
SMITH CORONA

PARTS MANUAL

Printed in U.S.A. Form 3-0771 © Copyright 1989 by Smith Corona Corporation

PREFACE

This comprehensive Parts Manual lists and illustrates parts and electronic components necessary for the maintenance of the following Smith Corona 5A Series Version 2 Electronic Typewriters:

Model Prefix	Model Name	Color	Model Prefix	Model Name	Color
5ACE	SL 500	Silver Fog	5ACF	SD 650	Silver Fog/Accent Gray
5ADD	300DLE	Platinum	5ADE	400DLD	Platinum/Accent Gray
5AEE	XL 1500	Platinum	5AEF	XD 4600	Platinum/Accent Gray
5AGB	Premier 100	Silver Fog	5APF	CXL 5100	Platinum/Accent Gray
5AKD	Deville 450	Silver Fog	5ASG	DX 4000	Silver Fog
5APE	CXL 4200	Platinum	5AWF	Mark XII	Platinum/Accent Gray
5AWE	Mark VI	Platinum			

Unique International parts are listed separately on each page where applicable. All Keybuttons are listed on the same page with a country designator after the item description -- see the Keyboard Codes at the top of each page for Color and Country.

A Reference Number is used on parts illustrations, and a Component Number is used for each Component on the Control PC Board diagrams. The number is listed numerically in the parts listing beneath the illustration or diagram, and refers directly to the part number.

When an illustrated part has variations in appearance, color, voltage, etc., the reference number appears more than once in the "REF" or "COMPONENT" column. Use extreme care in selecting parts in these areas.

If the part number is known, the page on which it is listed can readily be found by reference to the numerical parts listing at the end of the Manual.

Ordering Instructions: State the correct part number on all parts orders. State additional information if asked for. It is not necessary to state the part name unless the part number is not known. Do not order by reference numbers.

NOTICE

Smith Corona encourages PC Board repair by qualified technicians. If, however, after trying to repair a PC Board, the Board still does not work properly, return the Board to Smith Corona National Service Stores for warranty or repair exchange.

Important: Smith Corona does not replace or exchange damaged PC Boards (in or out of warranty).

Boards will be returned as irreparable and no credits or exchanges issued when:

- There are missing components
- There are damaged or lifted traces
- There are solder burns
- There is any other Board damage which makes the Board irreparable

Smith Corona reserves the right to discontinue parts at any time and/or to furnish substitutes.

CONTENTS

	Page Number
Jackets:	
5AEE, 5ACE, 5AWE, 5AKD, 5APE, 5AGB, 5ADD	2 & 3
5AEF, 5ACF, 5AWF, 5APF, 5ADE, 5ASG	4 & 5
Keyboard (All Models)	6
Keybutton Reference Chart	7 & 8
Carrier Molding, Rails, and Frames	9
Carrier Drive	10
Element Drive	11
Ribbon Drive	12
Ribbon Cassette and Correction Cassette Mechanism	13
Hammer	14
Paper Feed (Four Roller Paper Table)	15
Transformers (Domestic and International)	16
Control PC Boards	17
Control PC Board Components:	
P/N 783100, 783102	18 & 19
P/N 773901, 773918	20 - 22
Numerical Index	23 - 25

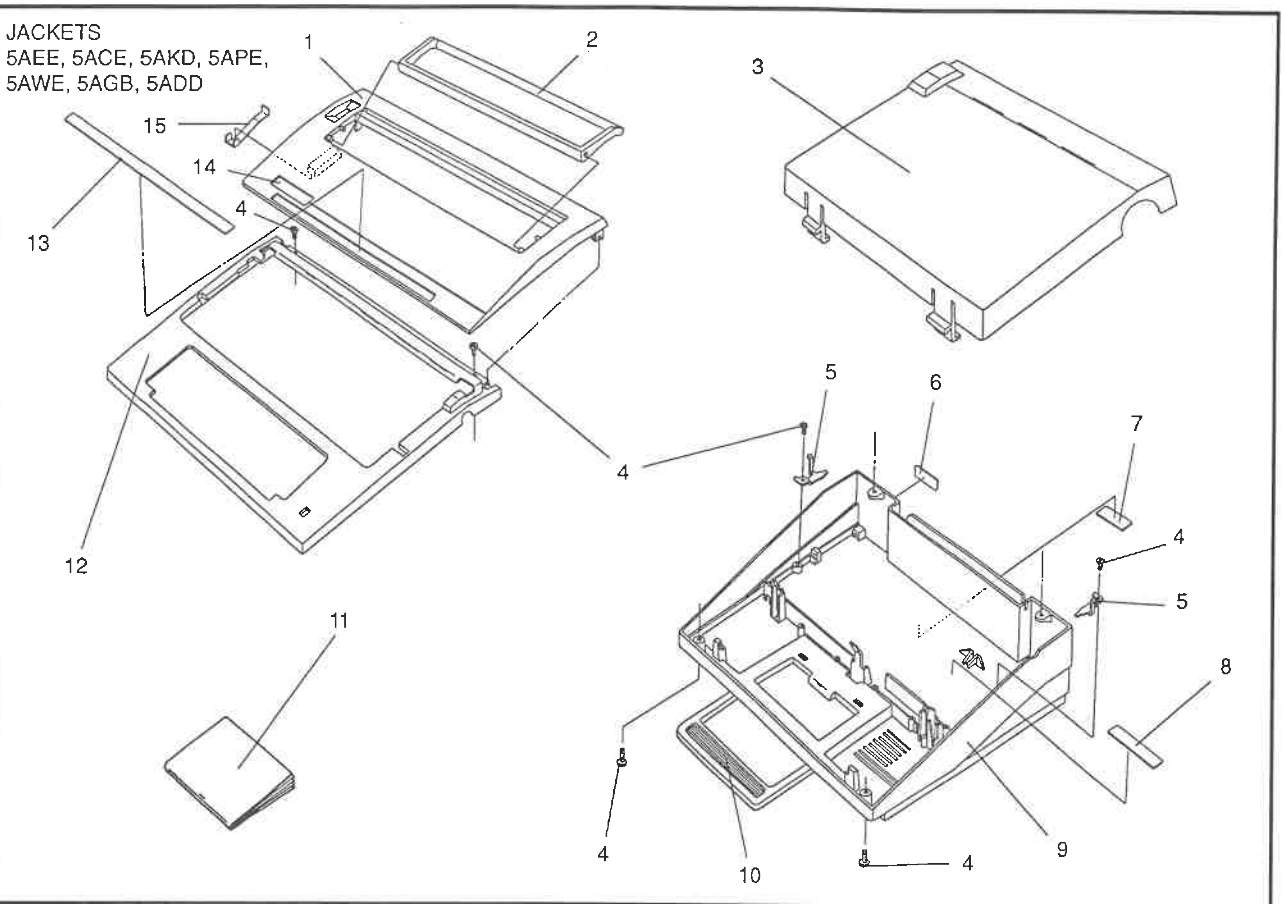

REF	PART NUMBER	PART NAME	QTY
1	773760	Deck, Platinum, XL 1500 (5AEE)	1
1	773761	Deck, Silver Fog, SL 500 (5ACE)	1
1	773762	Deck, Silver Fog, Deville 450 (5AKD)	1
1	773763	Deck, Platinum, Mark VI (5AWE)	1
1	773764	Deck, Platinum, CXL 4200 (5APE)	1
1	773765	Deck, Silver Fog, Premier 100 (5AGB)	1
1	773766	Deck, Platinum, 300DLE (5ADD)	1
2	784110	Paper Bail, Black (5ACE, 5AKD, 5AGB)	1
2	784112	Paper Bail, Platinum (5AEE, 5AWE, 5APE, 5ADD)	1
3	773560	Casing Lid, Silver Fog (5ACE, 5AKD, 5AGB)	1
3	773561	Casing Lid, Platinum (5AEE, 5AWE, 5APE, 5ADD)	1
4	747258	Screw	6
5	770829	Foot Retainer	2
8	772700	Warning/Cassette Position Label, USA & Canada	1
9	773693	Casing Base, Silver Fog, "Made in Singapore" (5ACE, 5AKD, 5AGB)	1
9	773694	Casing Base, Platinum, "Made in Singapore" (5AEE, 5AWE, 5APE, 5ADD)	1
10	780450	Casing Base Handle, Platinum	1
10	780451	Casing Base Handle, Silver Fog	1
11	783598	Owner's Manual, (5AEE, 5ACE, 5ADD, 5AWE, 5APE, 5AGB, 5AKD) USA & Canada	1
12	772685	Mask, Silver Fog (5ACE, 5AKD, 5AGB)	1
12	772686	Mask, Platinum (5AEE, 5AWE, 5APE, 5ADD)	1
13	773640	Deck Overlay, Platinum	1
13	773641	Deck Overlay, Silver Fog	1
14	729572	Deck Nameplate	1
15	771910	Paper Bail Detent	1

For Unique International Parts, See Page 3

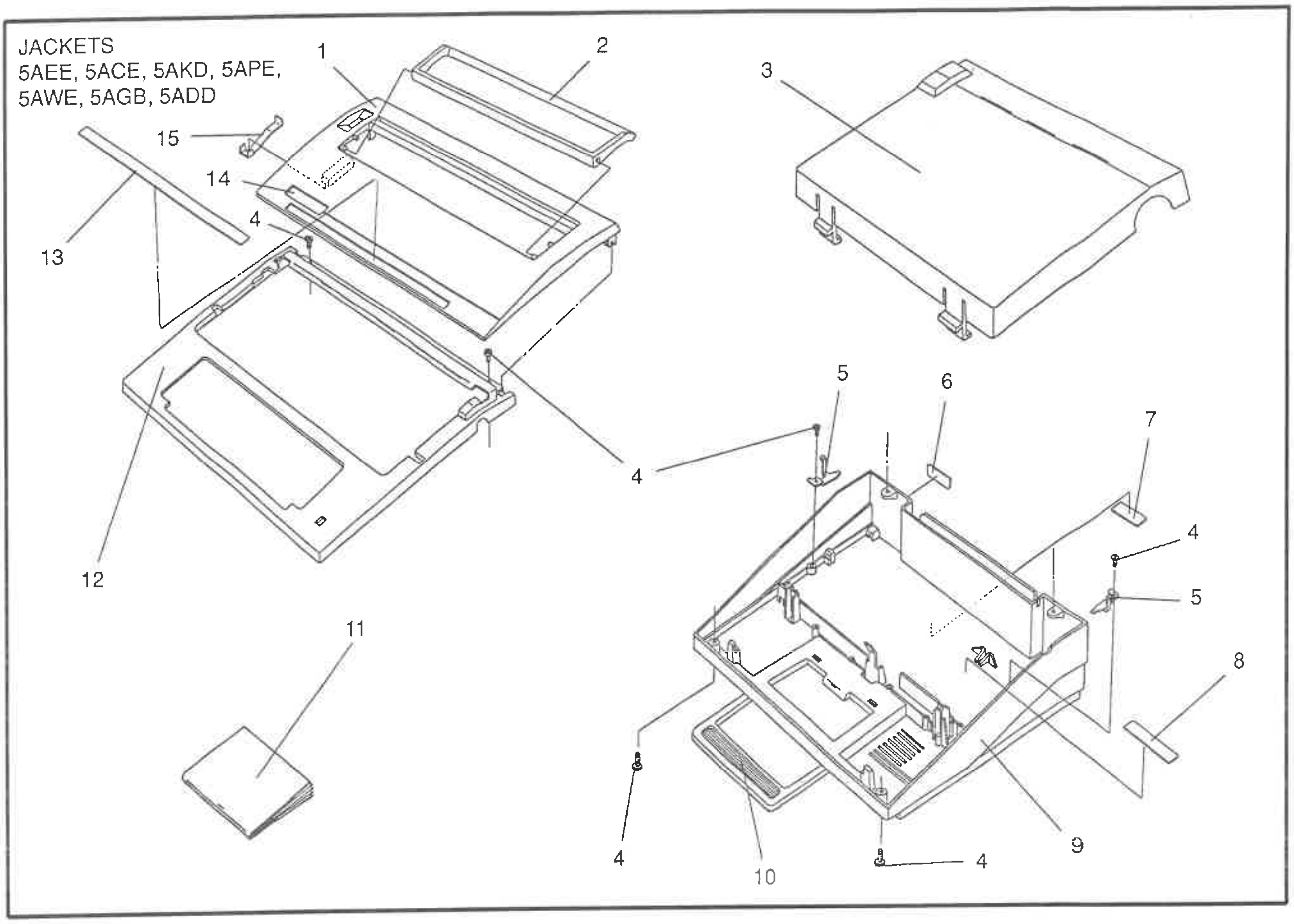

REF	PART NUMBER	PART NAME	QTY
		For International Models Only	
1	773760	Deck, Platinum, French/Canadian, Spanish/American, United Kingdom, Australia, Singapore, XL 1500 (5AEE)	1
1	773761	Deck, Silver Fog, French/Canadian, United Kingdom, SL 500 (5ACE)	1
1	773766	Deck, Platinum, United Kingdom, 300DLE (5ADD)	1
2	784110	Paper Bail, Black, French/Canadian, United Kingdom	1
2	784112	Paper Bail, Platinum, French/Canadian, Spanish/American, United Kingdom, Australia, Singapore	1
6	744491	"Made in Singapore" Country of Origin Label, United Kingdom (5AEE, 5ACE, 5ADD)	1
7	770756	"Made in Singapore" Electrical Rating Label, United Kingdom (5ACE)	1
7	770757	"Made in Singapore" Electrical Rating Label, United Kingdom, Australia, Singapore (5AEE)	1
8	772703	Warning/Cassette Position Label, French/Canadian, Spanish/American, Singapore, Australia, United Kingdom	1

REF	PART NUMBER	PART NAME	QTY
9	773693	Casing Base, Silver Fog, "Made in Singapore," French/Canadian (5ACE)	1
9	773694	Casing Base, Platinum, "Made in Singapore," French/Canadian, Spanish/American (5AEE)	1
9	773695	Casing Base, Platinum, "Made in Singapore," United Kingdom, Australia, Singapore (5AEE, 5ADD)	1
9	773696	Casing Base, Silver Fog, "Made in Singapore," United Kingdom (5ACE)	1
11	783599	Owner's Manual, French/Canadian (5AEE, 5ACE)	1
11	783600	Owner's Manual, Spanish/American (5AEE)	1
11	783601	Owner's Manual, United Kingdom, Australia (5AEE)	1
12	772685	Mask, Silver Fog, United Kingdom, French/Canadian (5ACE)	1
12	772686	Mask, Platinum, United Kingdom, Spanish/American, Australia, Singapore, French/Canadian (5AEE, 5ADD)	1

JACKETS
5AEF, 5ACF, 5APF, 5AWF,
5ASG, 5ADE

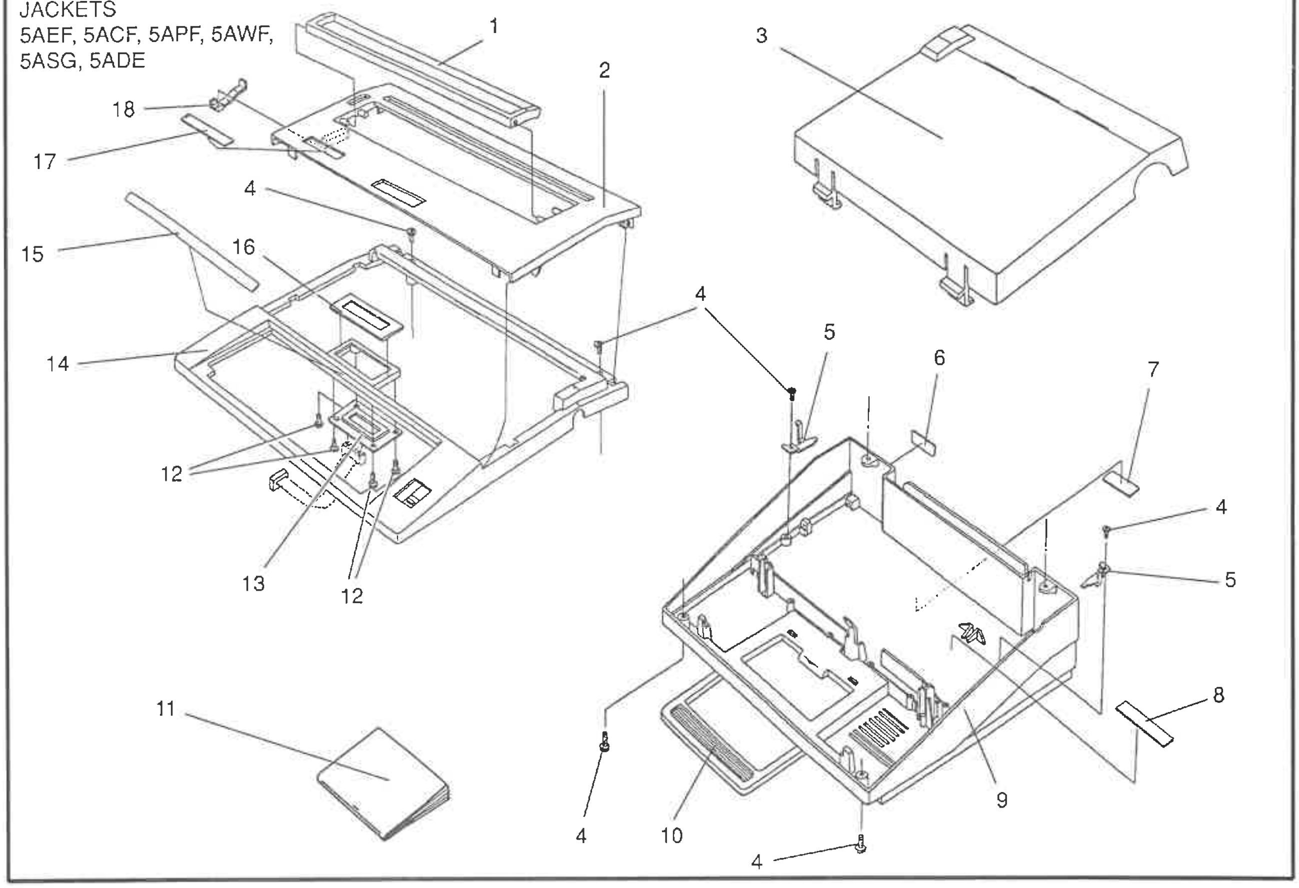

REF	PART NUMBER	PART NAME	QTY
1	772883	Bail, Accent Gray	1
2	773767	Deck, Platinum, XD 4600 (5AEF)	1
2	773768	Deck, Silver Fog, SD 650 (5ACF)	1
2	773769	Deck, Platinum, Mark XII (5AWF)	1
2	773770	Deck, Platinum, CXL 5100 (5APF)	1
2	773773	Deck, Platinum, 400DLD (5ADE)	1
2	773774	Deck, Silver Fog, DX 4000 (5ASG)	1
3	773560	Casing Lid, Silver Fog (5ACF, 5ASG)	1
3	773561	Casing Lid, Platinum (5AEF, 5AWF, 5APF, 5ADE)	1
4	747258	Screw	6
5	770829	Foot Retainer	2
8	772700	Warning/Cassette Position Label, USA & Canada	1
9	773693	Casing Base, Silver Fog, "Made in Singapore" (5ACF, 5ASG)	1
9	773694	Casing Base, Platinum, "Made in Singapore" (5AEF, 5AWF, 5APF, 5ADE)	1
10	780450	Casing Base Handle, Platinum	1
10	780451	Casing Base Handle, Silver Fog	1
11	783604	Owners Manual, USA & Canada (5AEF, 5ACF, 5AWF, 5APF, 5ADE)	1
12	780424	Screws	4
13	783205	LCD	1
14	773960	Mask, Accent Gray (5ACF)	1
14	773962	Mask, Accent Gray (5AEF, 5ADE, 5APF)	1
14	773964	Mask, Platinum (5AWF)	1
14	773965	Mask, Silver Fog (5ASG)	1
15	773600	Mask Overlay, Accent Gray, USA & Canada (5AEF, 5ADE, 5APF, 5ACF)	1
15	773602	Mask Overlay (5AWF)	1
15	773603	Mask Overlay (5ASG)	1
16	773620	LCD Overlay (5ACF, 5ASG)	1
16	773621	LCD Overlay, Platinum (5AEF, 5AWF, 5APF, 5ADE)	1
17	729572	Deck Nameplate	1
18	771910	Paper Bail Detent	1

For Unique International Parts, See Page 5

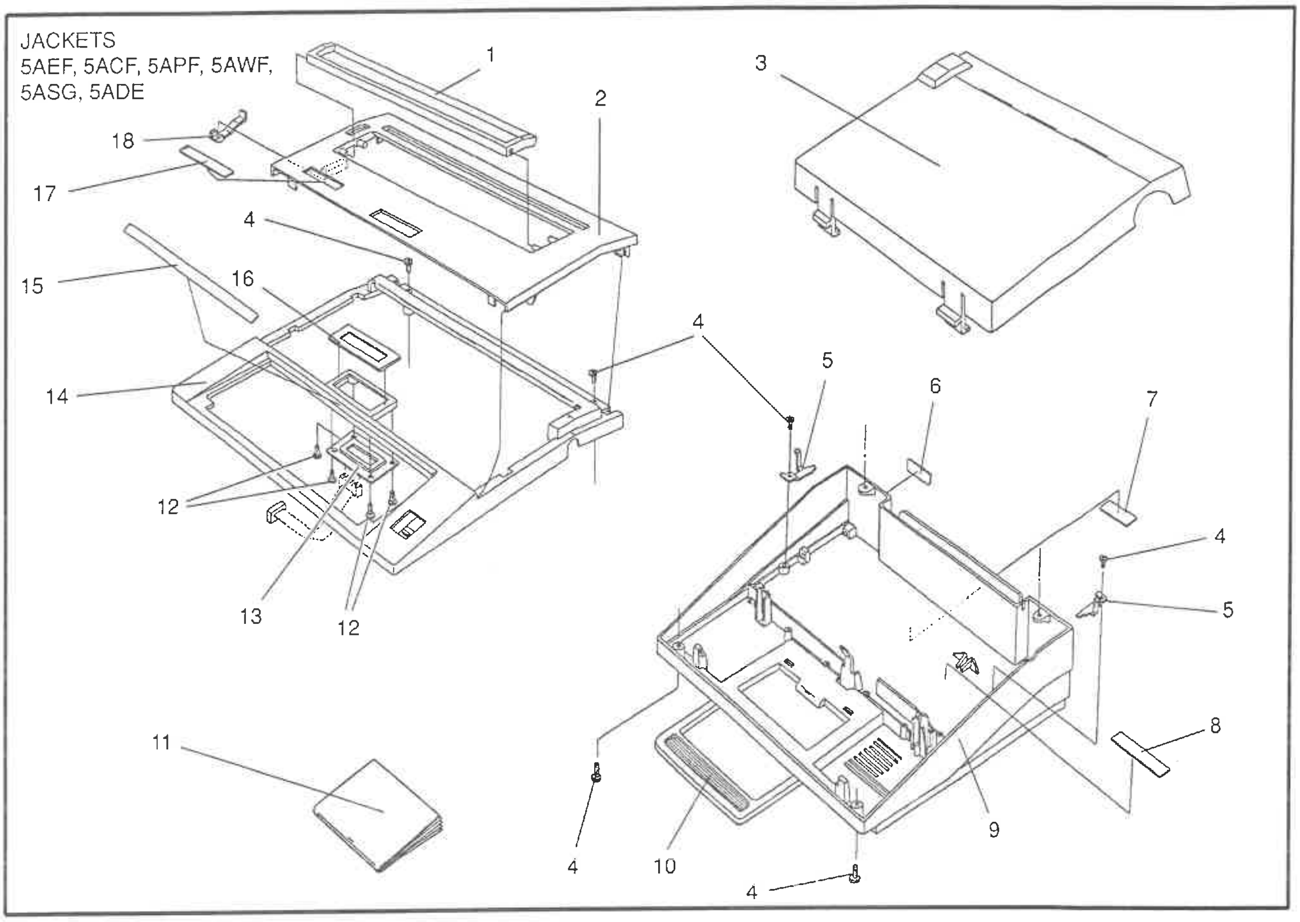

REF	PART NUMBER	PART NAME	QTY
		For International Models Only	
2	773767	Deck, Platinum, United Kingdom, French/Canadian, Spanish/American, Australia, XD 4600 (5AEF)	1
2	773768	Deck, Silver Fog, French/Canadian, SD 650 (5ACF)	1
6	744491	"Made in Singapore" Country of Origin Label, United Kingdom (5AEF, 5ACF)	1
7	770757	"Made in Singapore" Electrical Rating Label, United Kingdom, Australia (5AEF, 5ACF)	1
9	773693	Casing Base, Silver Fog, "Made in Singapore," French/Canadian (5ACF)	1
9	773694	Casing Base, Platinum, "Made in Singapore," French/Canadian, Spanish/American (5AEF)	1
9	773695	Casing Base, Platinum, "Made in Singapore," United Kingdom, Australia (5AEF)	1
9	773696	Casing Base, Silver Fog, "Made in Singapore," United Kingdom, (5ACF)	1
11	783605	Owners Manual, French/Canadian (5AEF, 5ACF)	1
11	783606	Owners Manual, Spanish/American (5AEF, 5ACF)	1
11	783607	Owners Manual, United Kingdom, Australia (5AEF, 5ACF, 5ADE)	1
14	773961	Mask, Accent Gray, United Kingdom (5ACF)	1
14	773962	Mask, Accent Gray, Spanish/American (5AEF, 5ADE, 5APF)	1
14	773963	Mask, Accent Gray, United Kingdom, Australia (5AEF, 5ADE)	
15	773601	Mask Overlay, Accent Gray, United Kingdom, Australia	1

KEYBOARD

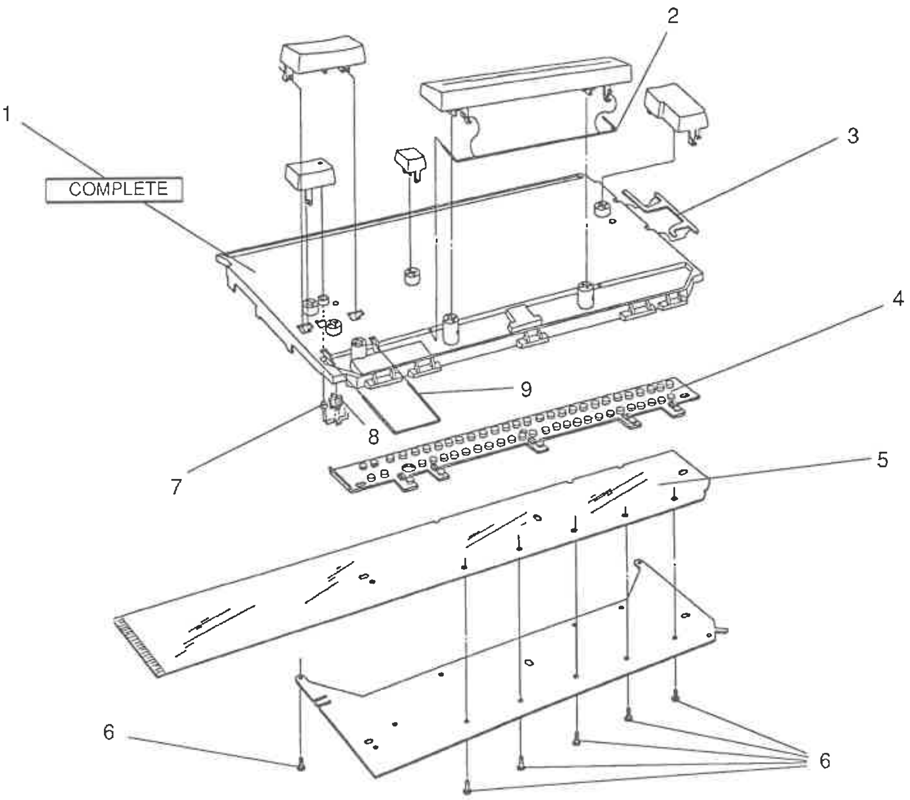

REF	PART NUMBER	PART NAME	QTY
1	778850	Keyboard Complete, Platinum, USA & Canada (5AEE, 5ACE, 5AWE, 5APE, 5AKD, 5AGB, 5ADD)	1
1	778854	Keyboard Complete, Platinum, USA & Canada (5AEF, 5ACF, 5AWF, 5APF, 5ADE, 5ASG)	1
2	778281	Spacebar Bail	1
3	778280	Return Bail	1
4	778804	Molded Switches	1
5	778805	Flexible Circuit	1
6	778807	Self Tap Screw	13
7	778317	LED, Red	1
8	778347	LED Contact Washer	1
9	778282	Left Shift Bail	1

REF	PART NUMBER	PART NAME	QTY
		Keyboards for International Models Only	
1	778851	Keyboard Complete, Platinum, French/Canadian (5AEE, 5ACE)	1
1	778852	Keyboard Complete, Platinum, Spanish/American (5AEE)	1
1	778853	Keyboard Complete, Platinum, United Kingdom, Australia (5AEE, 5ACE, 5ADD)	1
1	778855	Keyboard Complete, Platinum, French/Canadian (5AEF, 5ACF)	1
1	778856	Keyboard Complete, Platinum, Spanish/American (5AEF)	1
1	778857	Keyboard Complete, Platinum, United Kingdom, Australia (5AEF)	1

KEYBUTTON
REFERENCE
CHART

FOR THE FOLLOWING MODELS ONLY;

5AEE, 5ACE, 5AWE, 5AKD,
5APE, 5AGB, 5ADD

KEYBOARD:

USA & ENGLISH CANADIAN:	1063
UK & AUSTRALIA:	5108
SPANISH AMERICAN:	1492
FRENCH CANADIAN:	1132

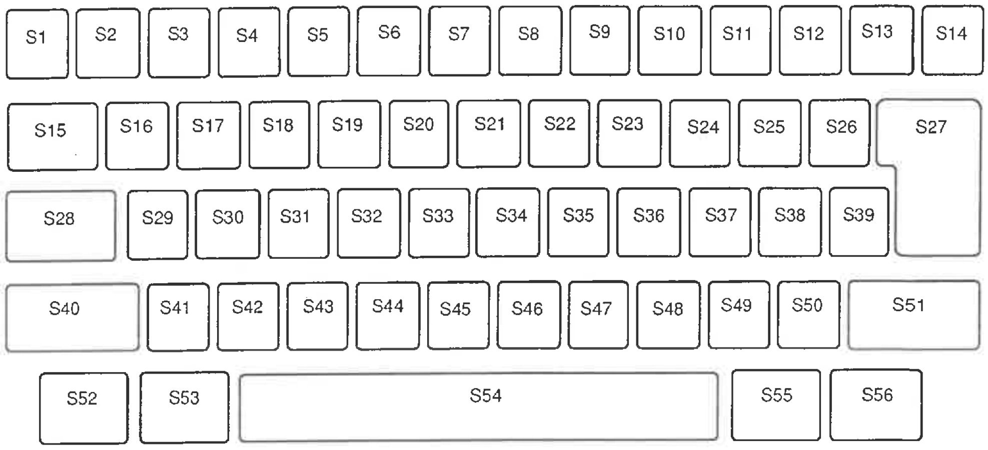

S = SWITCH

REF	PART NUMBER	ITEM
		For Models 5AEE, 5ACE, 5AWE, 5AKD, 5APE, 5AGB, 5ADD
1	778640	Tab Set/Clear
2	778401	1 US, EC, SA, UK
3	778402	2 US, EC, UK
4	778403	3 US, EC, SA
5	778404	4
6	778405	5
7	778406	6 US, EC, UK
8	778407	7 US, EC, FC, SA, UK
9	778408	8 US, EC, UK
10	778409	9 US, EC, FC, SA, UK
11	778410	0 US, EC, FC, SA, UK
12	778411	_ /- US, EC, FC, SA, UK
13	778412	+/= US, EC, FC, SA, UK
14	778413	Backspace
15	778414	Tab
16	778641	Q US, EC
17	778642	W US, EC
18	778643	E US, EC
19	778644	R US, EC
20	778645	T US, EC
21	778646	Y US, EC
22	778647	U US, EC, UK
23	778648	I US, EC, UK
24	778423	O
25	778424	P US, EC, FC, SA, UK
26	778649	¼ / ½ US, EC, FC
27	778650	Return/Relocate
28	778427	Lock
29	778428	A
30	778429	S

REF	PART NUMBER	ITEM
31	778430	D
32	778431	F
33	778432	G
34	778433	H
35	778434	J
36	778435	K
37	778436	L
38	778437	: / ; US, EC, FC, UK
39	778651	" / ' / ¶ US, EC
40	778439	Shift (Left)
41	778440	Z US, EC, FC, SA, UK
42	778441	X
43	778442	C
44	778443	V
45	778444	B
46	778445	N
47	778446	M
48	778447	, / , US, EC, UK
49	778448	. / . US, EC, FC, SA, UK
50	778449	? over / US, EC, UK
51	778450	Shift (Right)
52	778652	Code
53	778653	Margin L/R
54	778654	Spacebar/Halfspace
55	778454	Worderaser
56	778455	Correct
		Unique International
2	778456	1 FC
3	778457	2 FC, SA
4	778458	3 FC
4	778484	3 UK
7	778459	6 FC, SA

REF	PART NUMBER	ITEM
9	778460	8 FC, SA
16	778655	Q FC
16	778663	Q SA
16	778672	Q UK
17	778656	W FC
17	778673	W UK
17	778664	W SA
18	778657	E FC
18	778665	E SA
18	778674	E UK
19	778658	R FC
19	778666	R SA
19	778675	R UK
20	778659	T FC
20	778667	T SA
20	778676	T UK
21	778660	Y FC
21	778668	Y SA
21	778677	Y UK
22	778661	U FC
22	778669	U SA
23	778468	I FC, SA
26	778670	¨ / ´ over / SA
26	778678	¼ / ½ / ⅓ UK
38	778480	Ñ SA
39	778662	ˆ / ` / ¶ FC
39	778671	: / ; / ¡ SA
39	778679	" / ' / ¾ UK
48	778470	? / , FC
48	778482	° / , SA
50	778471	Ç / é FC
50	778483	? / ¿ SA

KEYBUTTON
REFERENCE
CHART

FOR THE FOLLOWING MODELS ONLY:

5AEF, 5ACF, 5APF,
5ADE,5ASG,5AWF

KEYBOARD:

USA & ENGLISH CANADA : 1063
FRENCH CANADA: 1132
UK & AUSTRALIA: 5108
SPANISH AMERICA: 1492

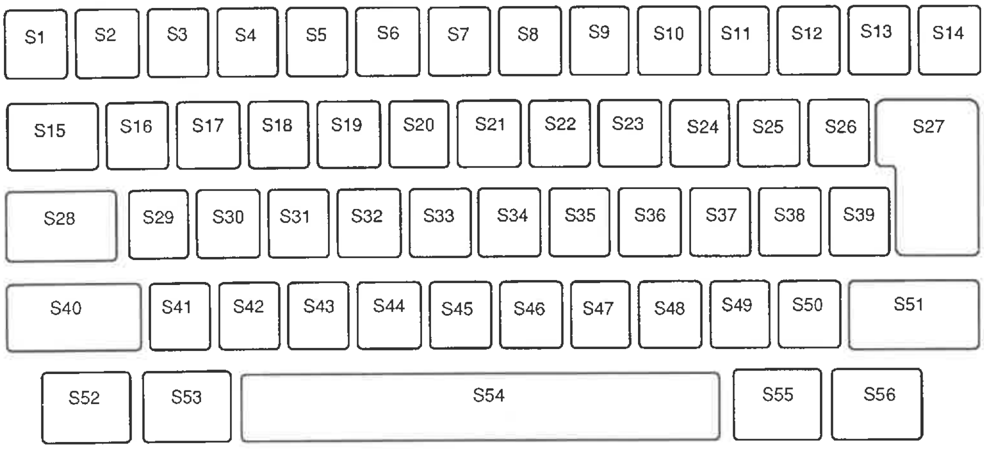

S = SWITCH

REF	PART NUMBER	ITEM	REF	PART NUMBER	ITEM	REF	PART NUMBER	ITEM
		For Models 5AEF, 5ACF, 5AWF, 5APF, 5ASG, 5ADE			**Unique International**			
2	778577	1 US, EC	2	778602	1 FC			
3	778578	·2 US, EC	2	778608	1 SA			
4	778579	3 US, EC	2	778615	1 UK			
5	778580	4 US, EC	3	778603	2 FC			
6	778581	5 US, EC	3	778609	2 SA			
7	778582	6 US, EC	3	778616	2 UK			
8	778680	& / [/ 7	4	778604	3 FC			
9	778681	* /] / 8	4	778617	3 UK			
10	778682	(/ § / 9	4	778610	3 SA			
11	778683	) / ¶ / 0	5	778605	4 FC			
16	778592	Q	5	778611	4 SA			
17	778596	W	5	778618	4 UK			
18	778597	E	6	778606	5 FC			
19	778598	R	6	778612	5 SA			
20	778599	T	6	778619	5 UK			
21	778600	Y	7	778700	6 FC			
22	778601	U	7	778613	6 SA			
23	778468	I	7	778620	6 UK			
26	778684	$^1/_4$ / $^1/_2$	8	778694	7 FC			
29	778685	A / Adjust	8	778699	7 SA			
30	778686	S / Stop	8	778407	7 UK			
31	778687	D / Dictionary	9	778695	8 FC			
32	778688	F / Find	9	778460	8 SA			
36	778689	K / KB II	9	778408	8 UK			
37	778690	L / List	10	778696	9 FC			
40	778691	Shift / Paper In	10	778409	9 SA, UK			
43	778692	C / Close	11	778410	0 FC, SA, UK			
45	778693	B / Bold	39	778697	^ / `			

CARRIER MOLDING, RAILS,AND FRAMES

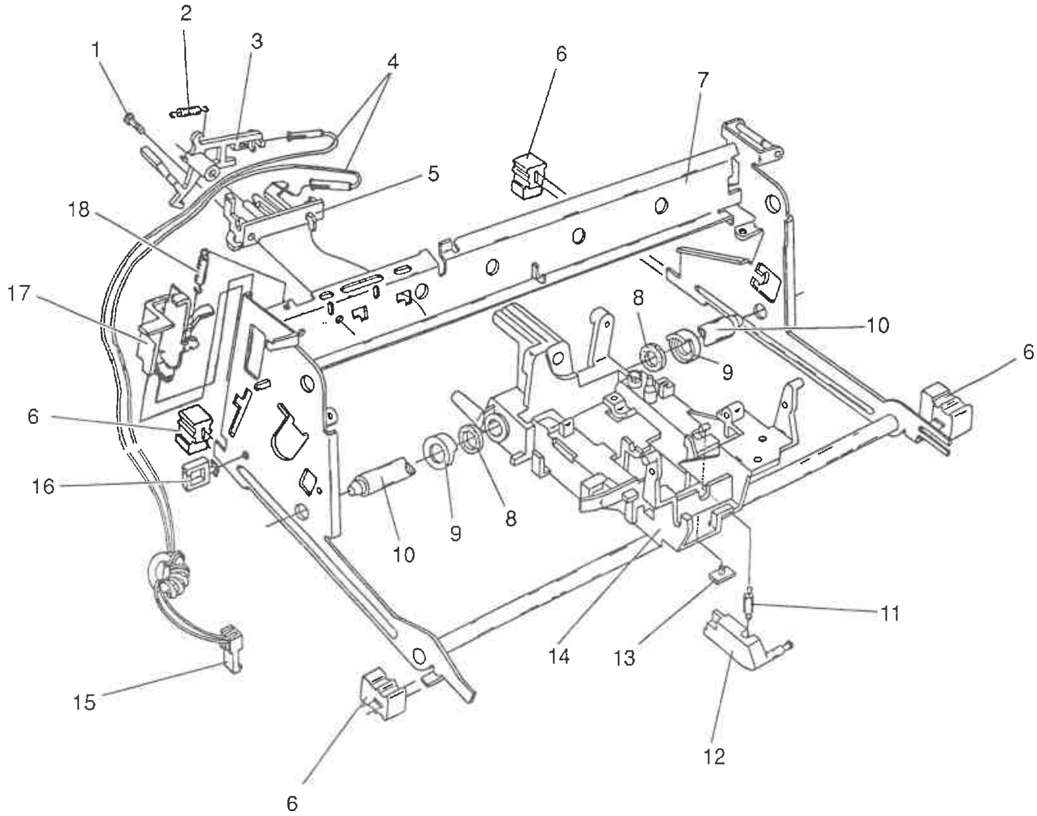

REF	PART NUMBER	PART NAME	QTY	REF	PART NUMBER	PART NAME	QTY
1	783194	Self Tap Screw	1	10	771427	Rear Carrier Shaft	1
2	133250	Spring	1	11	771617	Spring	1
3	783190	Left End Switch Latch	1	12	773046	Carrier Restraint	1
4	783832	Left End Switch Assembly (w/Ref 15)	1	13	780411	Slider	1
5	783191	Left End Switch Bracket	1	14	771954	Molded Carrier (w/Ref 13)	1
6	770435	Foot	4	15	751057	Connector, 2 Pin	1
7	773755	Frame Assembly Complete	1	16	717087	Cable Clamp	1
8	740084	Wiper	2	17	771465	Actuator	1
9	740257	Wiper Retainer	2	18	771271	Spring	1

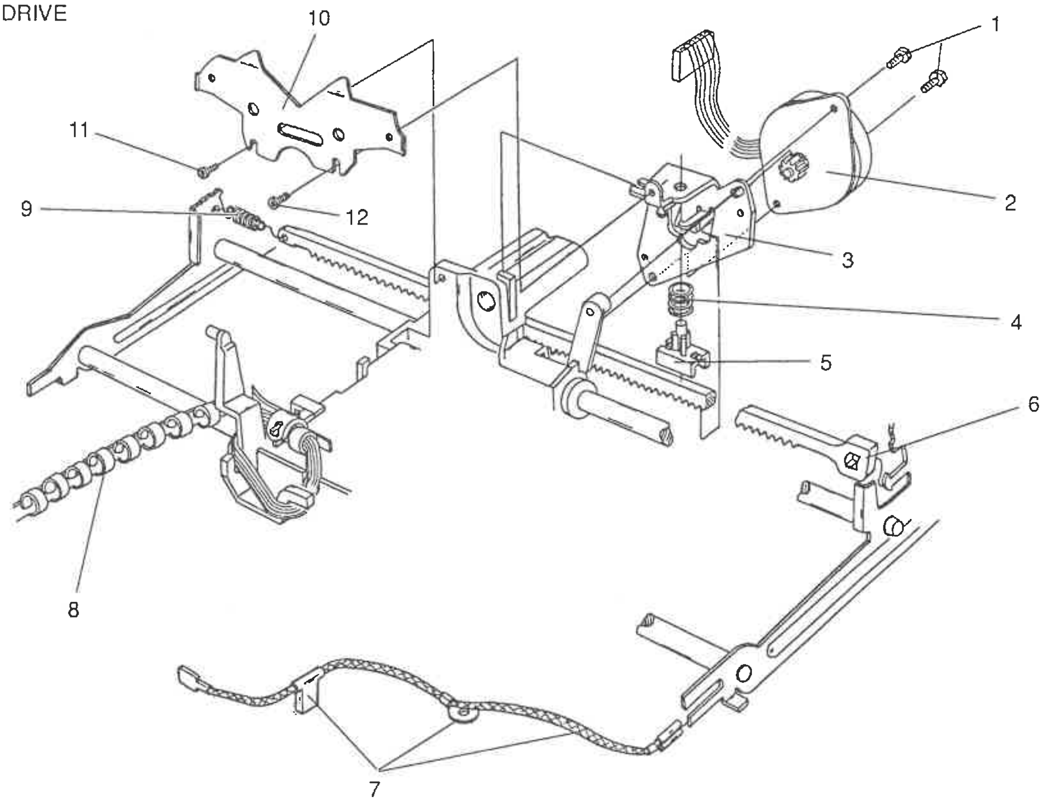

REF	PART NUMBER	PART NAME	QTY	REF	PART NUMBER	PART NAME	QTY
1	747258	Carrier Motor Screw	2	7	772636	Ground Cable Assembly	1
2	770172	Carrier Motor Assembly	1	8	770317	Wire Binder Retainer	1
3	768662	Carrier Return Bracket	1	9	768661	Spring	1
4	751719	Spring	1	10	771911	Line Indicator	1
5	768671	Anti-Backlash Slider	1	11	770672	Self Tap Screw	2
6	768669	Carrier Drive Rack	1	12	781910	Screw	1

ELEMENT DRIVE

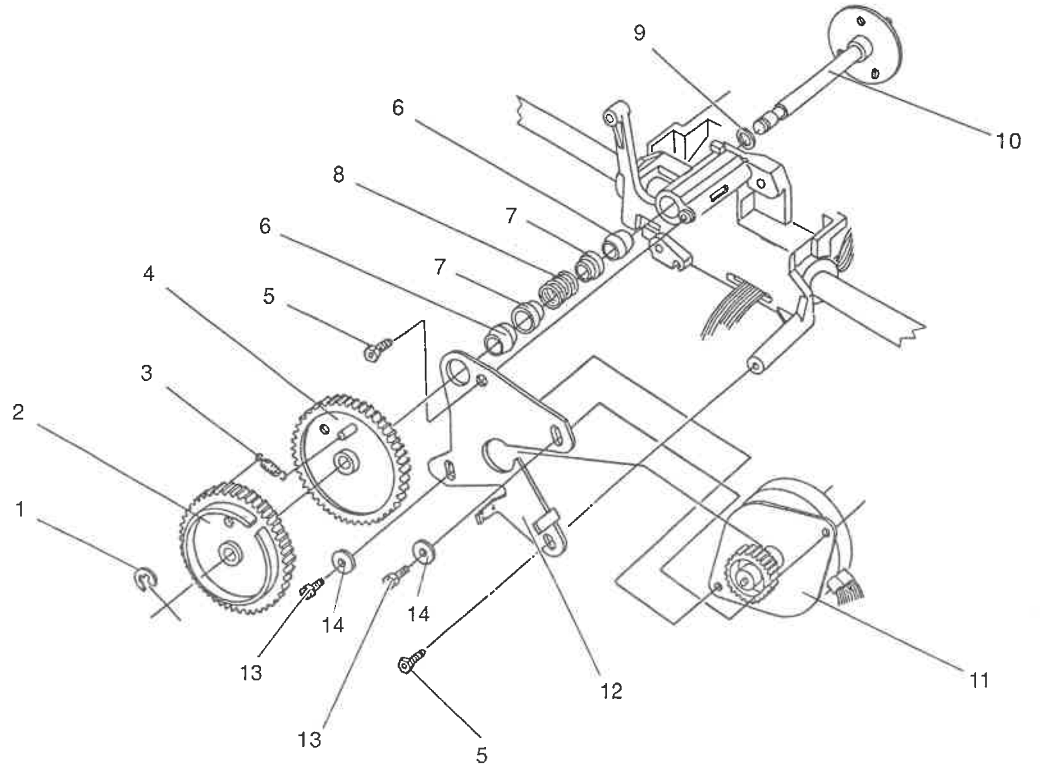

REF	PART NUMBER	PART NAME	QTY	REF	PART NUMBER	PART NAME	QTY
1	467980	E-Ring	1	8	782619	Spring	1
2	749965	Outside Scissor Gear	1	9	752735	Thrust Washer	1
3	771260	Element Gear Spring	1	10	740004	Element Drive Shaft	1
4	745321	Inside Scissor Gear	1	11	770175	Element Motor	1
5	747258	Self Tap Screw	2	12	783193	Element Motor Plate	1
6	740143	Bearing	2	13	770297	Screw	2
7	752734	Bearing Retainer	2	14	105090	Flat Washer	2
						For International LCD Models Only	
				11	770176	Element Motor (5AEF, 5ACF, 5ADE)	1

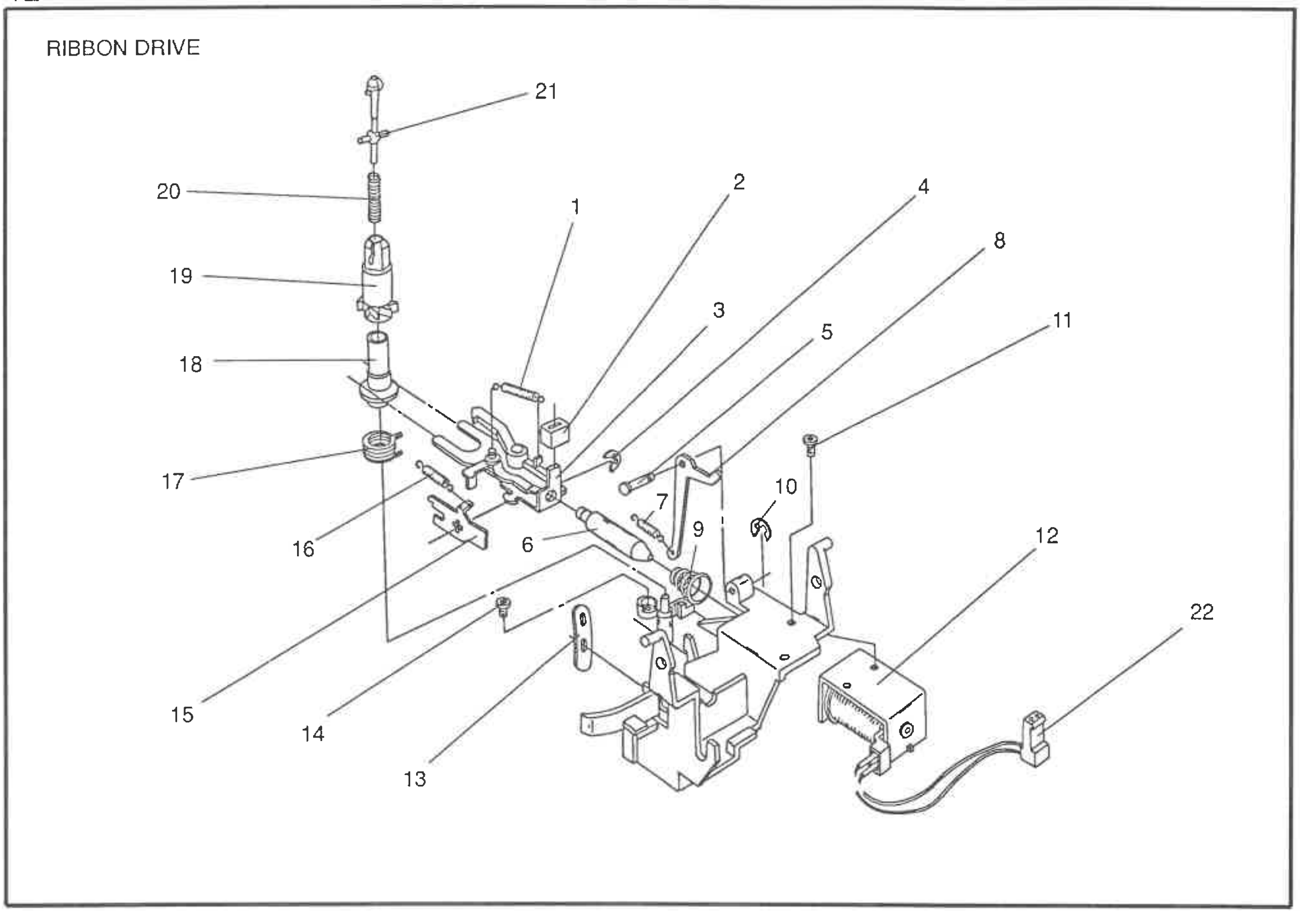

REF	PART NUMBER	PART NAME	QTY
1	740111	Spring	1
2	781725	Bumper	1
3	770290	Ribbon Feed Assembly	1
4	467980	E-Ring	1
5	770295	Correction Stud	1
6	771411	Ribbon Feed Plunger	1
7	428090	Spring	1
8	770294	Correction Lift Bellcrank	1
9	770277	Plunger Spring	1
10	102271	E-Ring	1
11	773340	Self Tap Screw	1
12	781494	Ribbon Drive Solenoid (w/Ref 22)	1
13	770298	Wire Strap	1
14	747258	Self Tap Screw	1
15	770285	Cassette Feed Pawl Latch	1
16	771464	Spring	1
17	770833	Anti-Backup Spring	1
18	770161	Ribbon Feed Shaft	1
19	770164	Ribbon Drive Ratchet	1
20	749841	Spring	1
21	770292	Ribbon Driver	1
22	751057	Connector, 2 Pin	1

RIBBON CASSETTE & CORRECTION CASSETTE MECHANISM

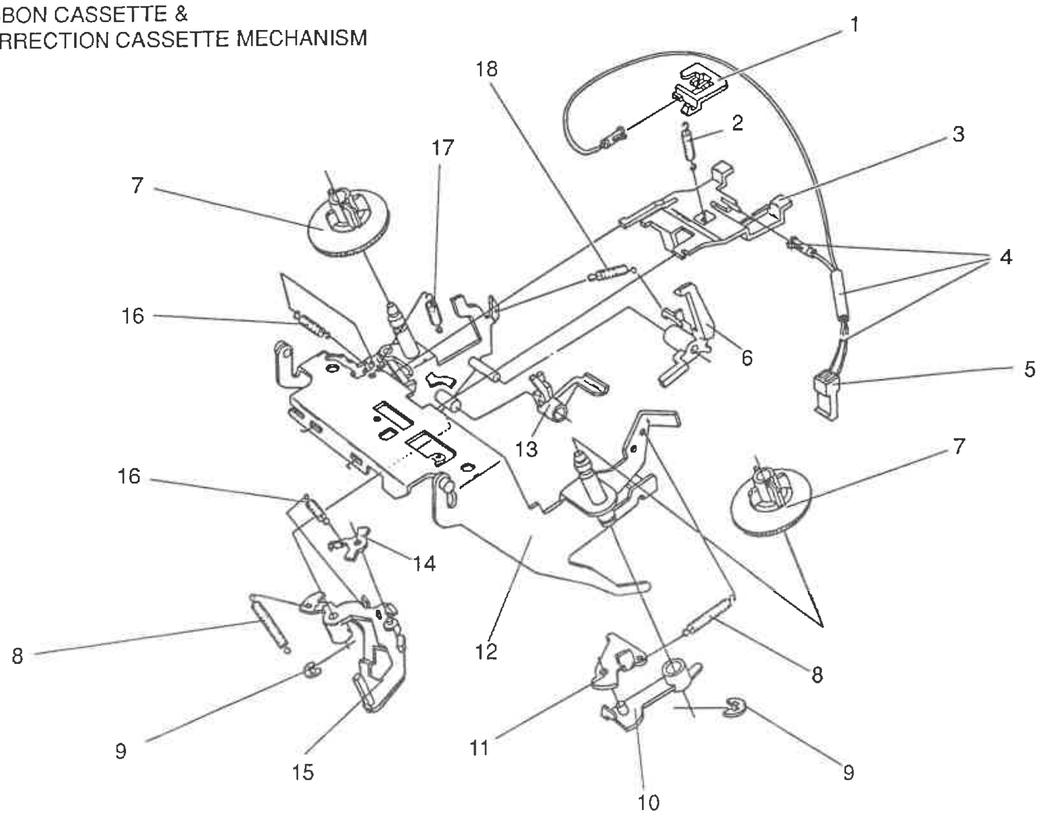

REF	PART NUMBER	PART NAME	QTY
1	771796	Upper Contact Switch Holder	1
2	133250	Spring	1
3	771797	Lower Contact Switch Holder	1
4	771847	Cassette Switch Wire Assembly (w/Ref 5)	1
5	751057	Connector, 2 Pin	1
6	772111	Cassette Latch	1
7	771818	Ribbon Hub Ratchet	2
8	771917	Spring	2
9	771912	E-Ring	2
10	773047	Tension Carrier	1
11	771810	Tension Pawl	1
12	782117	Correction Bail Assembly	1
13	771809	Correction Ribbon Feed Arm	1
14	771807	Correction Ribbon Feed Pawl	1
15	771826	Correction Ribbon Actuator	1
16	428090	Spring	2
17	770686	Spring	1
18	771843	Spring	1

HAMMER

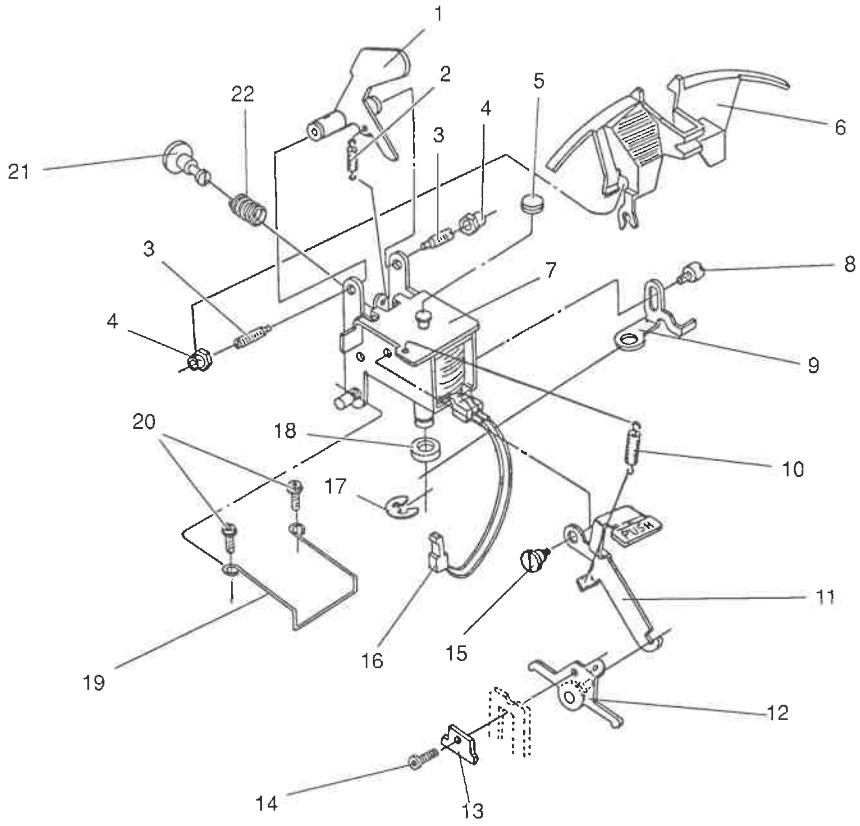

REF	PART NUMBER	PART NAME	QTY	REF	PART NUMBER	PART NAME	QTY
1	752637	Hammer	1	12	770432	Hammer Plate	1
2	771429	Hammer Spring	1	13	770280	Washer	1
3	771794	Pivot Screw	2	14	770297	Screw	1
4	770296	Pivot Nut	2	15	772920	Screw	1
5	772020	Plunger Cap	1	16	751057	Connector, 2 Pin	1
6	771836	Ribbon Guide	1	17	771463	E-Ring	1
7	771827	Hammer Solenoid Complete (w/Ref 16)	1	18	748562	O-Ring	1
				19	749789	Hammer Solenoid Retainer	1
8	772920	Screw	1	20	747258	Self Tap Screw	2
9	770162	Latch Trip	1	21	749735	Printwheel Pusher	1
10	771419	Spring	1	22	749734	Pusher Spring	1
11	773049	Hammer Latch Lever	1				

PAPER FEED

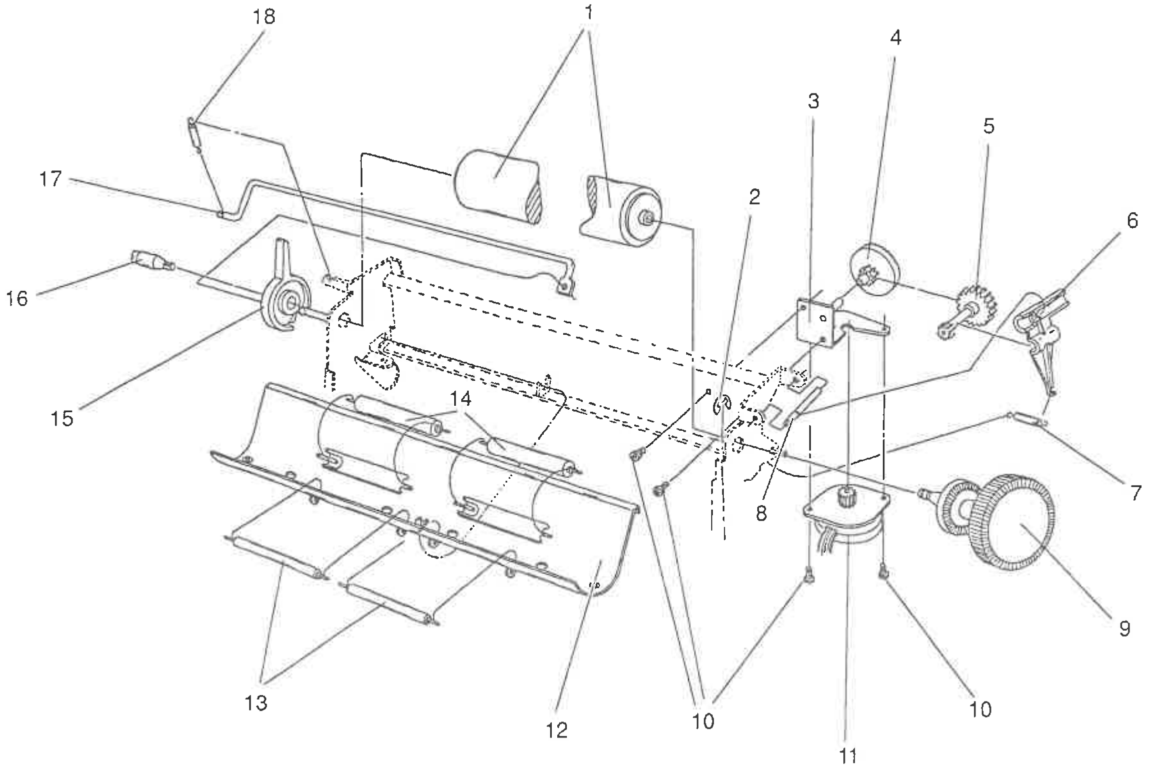

REF	PART NUMBER	PART NAME	QTY
1	752559	Platen Assembly	1
2	771930	E-Ring	1
3	771468	Linespace Bracket	1
4	770165	Pinion Face Gear	1
5	750056	Linespace Pinion	1
6	773145	Linespace Pinion Pivot	1
7	770199	Linespace Pinion Spring	1
8	771460	Pinion Carrier	1
9	771932	Platen Knob, Black (5ACE, 5AKD, 5AGB)	1
9	771935	Platen Knob, Accent Gray (5ACF, 5AEF, 5APF, 5AWF, 5ADE, 5ASG)	1
9	771934	Platen Knob, Platinum (5AEE, 5APE, 5AWE, 5ADD)	1
10	771466	Self Tap Screw	4
11	770180	Linespace Motor Assembly	1
12	753587	Paper Table (Nickel)	1
13	771611	Paper Feed Roller, Front	2
14	771610	Paper Feed Roller, Rear	2
15	770952	Paper Release Lever, Accent Gray (5AEF, 5ACF, 5AWF, 5APF, 5ADE, 5ASG)	1
15	750077	Paper Release Lever, Black (5ACE, 5AKD, 5AGB, 5AEE, 5AWE, 5APE, 5ADD)	1
16	750075	Left Platen Shaft	1
17	753580	Paper Release Shaft	1
18	751437	Paper Release Spring	1

For International Models Only

REF	PART NUMBER	PART NAME	QTY
9	771935	Platen Knob, Accent Gray, United Kingtom (5AEF, 5ACF, 5ADE)	1
15	770952	Paper Release Lever, Accent Gray, United Kingdom (5AEF, 5ACF, 5ADE)	1

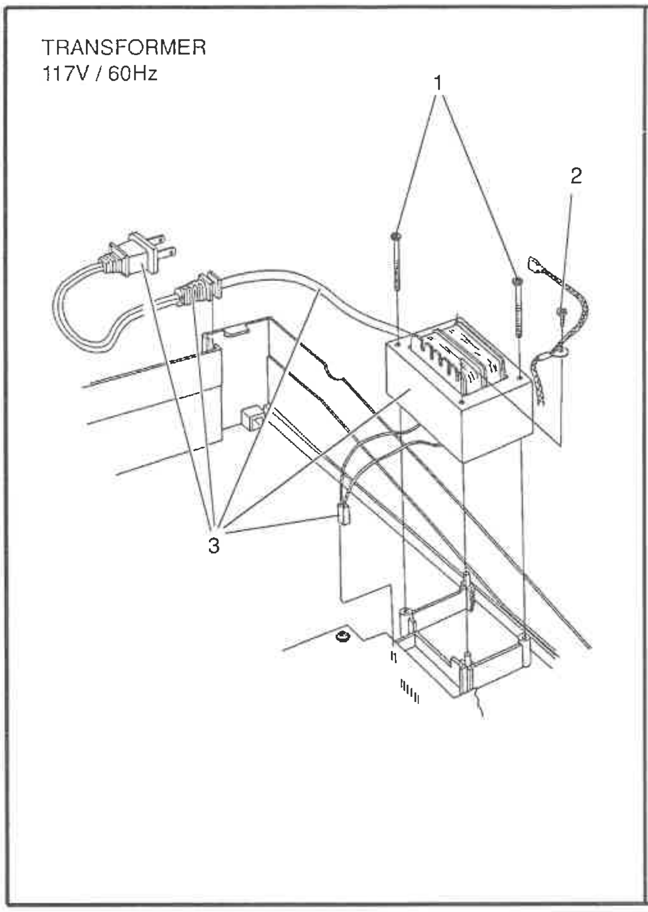

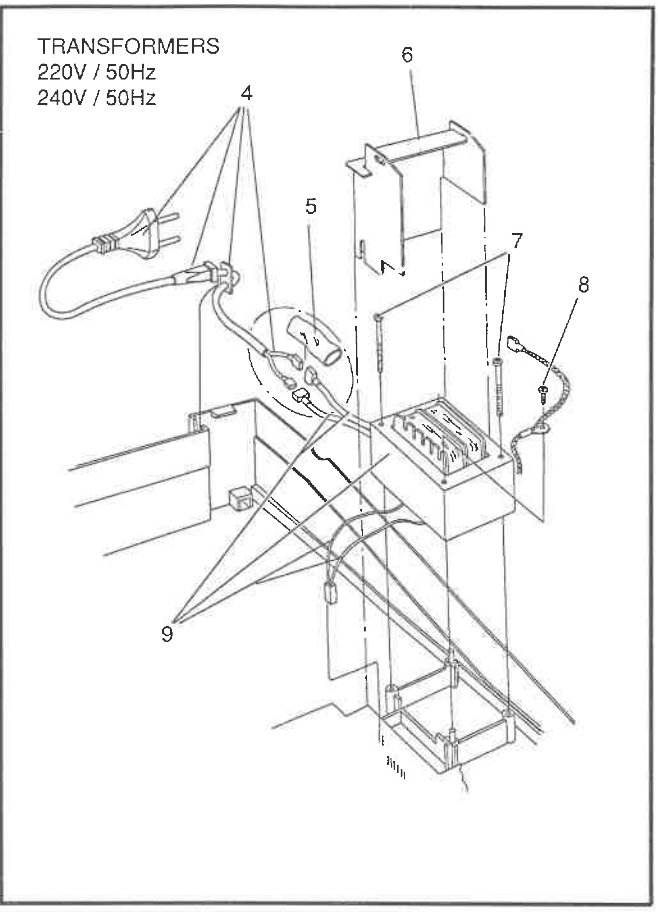

REF	PART NUMBER	PART NAME	QTY
		For USA and Canada Models Only	
1	770434	Transformer Screw	2
2	781952	Self Tap Screw	1
3	773580	Transformer Assembly USA & CAN (includes Line Cord, 120V/60Hz)	1

REF	PART NUMBER	PART NAME	QTY
		For International Models Only	
4	771696	Line Cord Assembly, Australia	1
4	771695	Line Cord Assembly, Continental Europe & Singapore	1
5	724940	Tubing	1
6	771724	Cover	1
7	770434	Transformer Screw	2
8	781952	Self Tap Scrw	1
9	773593*	Transformer Assembly, 220V/50Hz Continental Europe	1
9	771597*	Transformer Assembly, 240V/50Hz, United Kingdom (Attached Line Cord)	1
9	773592*	Transformer Assembly, 240V/50Hz Australia, Singapore	1

*** International Transformers available for sale *only* to International Distributors.**

CONTROL PC BOARD
5AEE, 5ACE, 5AWE, 5AKD, 5AGB, 5APE, 5ADD

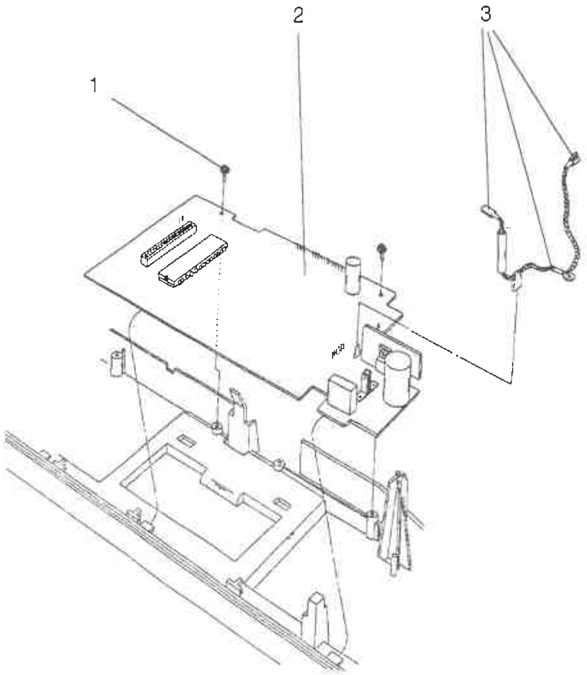

CONTROL PC BOARD
5AEF, 5ACF, 5AWF, 5APF, 5ASG, 5ADE

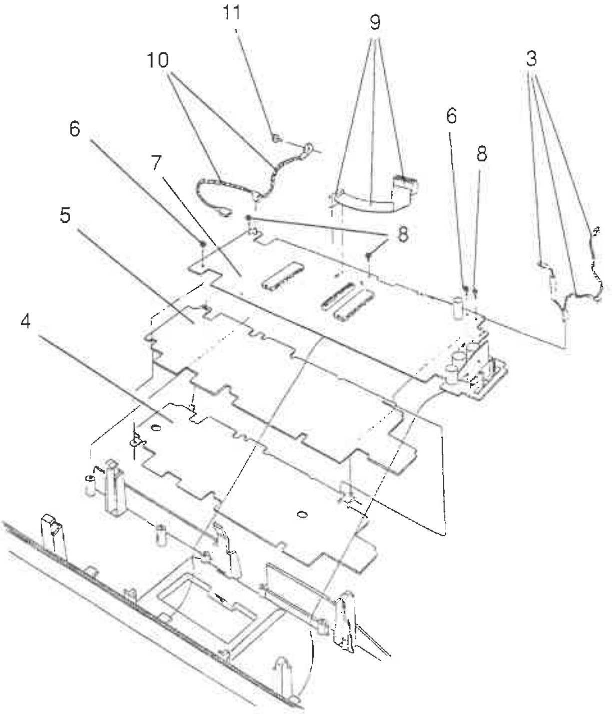

REF	PART NUMBER	PART NAME	QTY
		For Models 5AEE, 5ACE, 5AWE, 5APE, 5AGB, 5ADD	
1	747258	Screw	2
2	783100	Control PC Board	1
3	772636	Ground Cable Assembly	1
		For International Models 5ACE, 5AEE, 5ADD	
2	783102	Control PC Board, French/Canadian, Spanish/American, United Kingdom, Singapore, Australia	1

REF	PART NUMBER	PART NAME	QTY
		For Models 5AEF, 5ACF, 5AWF, 5APF, 5ADE, 5ASG	
3	772636	Ground Cable Assembly, Right	1
4	773846	Ground Plate	1
5	773845	Insulator	1
6	781910	Self Tap Screw	2
7	773901	Control PC Board, USA and Canada	1
8	747258	Screw	3
9	782329	Display Cable	1
		For International Models Only	
7	773919	Control PC Board, French/Canadian (5AEF, 5ACF)	1
7	773920	Control PC Board, Spanish/American, (5AEF)	1
7	773921	Control PC Board, United Kingdom, Australia (5AEF, 5ACF)	1
10	782416	Ground Cable Assembly, Left (5AEF, 5ACF)	1
11	781910	Screw	1

COMPONENT DIAGRAM
CONTROL PC BOARD
MODELS : 5AEE, 5ACE,
5AWE, 5AKD,
5AGB, 5APE,
5ADD

P/N 783100
P/N 783102

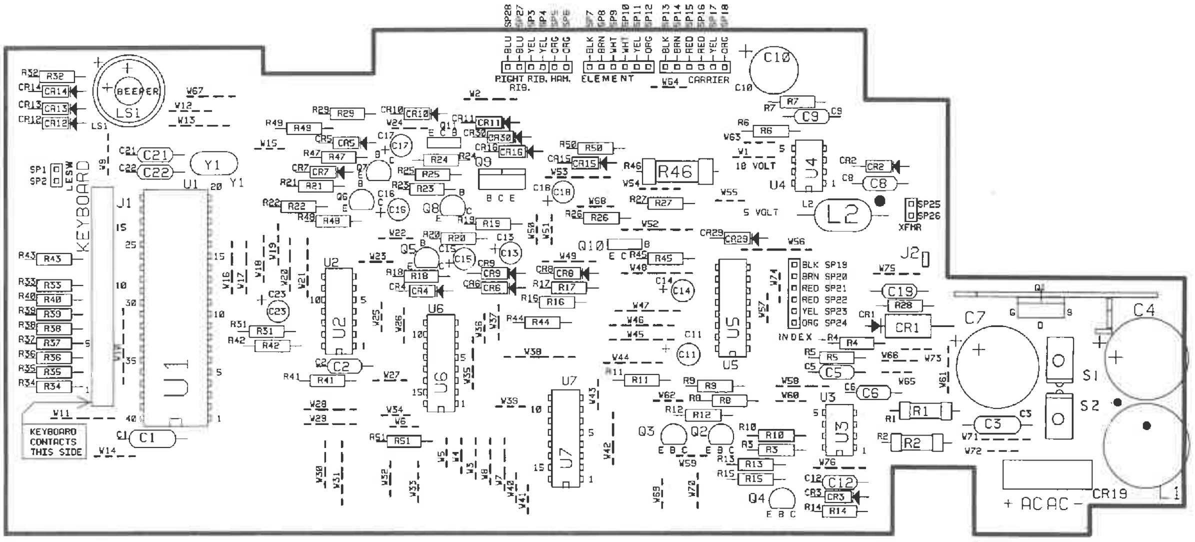

COMPONENT	PART NUMBER	DESCRIPTION
C1, C2, C5, C8	700341	Capacitor, .01 uF/50V, Axial, Ceramic, +/-20%
C3	741573	Capacitor, .1 uF/100V, Axial, Ceramic, +/-20%
C4	770218	Capacitor, 2200 uF/50V, Radial, Electric
C6	741575	Capacitor, 390pF/100V, Axial, Ceramic
C7	730022	Capacitor, 3300 uF/25V, Radial, Electric
C9	741576	Capacitor, 270pF/100V, Axial, Ceramic
C10	730033	Capacitor, 1000 uF/6.3V, Radial, Electric
C11, C14, C15, C18	736112	Capacitor, 1 uF/50V, Radial, Electric
C12	741565	Capacitor, .1 uF/50V, Axial, Ceramic, +80/-20%
C13, C17	736104	Capacitor, 47 uF/16V, Radial, Electric
C16	736111	Capacitor, 68 uF/6.3V, Radial, Electric
C19	700368	Capacitor, 1000 pF/100V, Axial, Ceramic
C21, C22	700365	Capacitor, 30pF/100V, Axial, Ceramic
C23	770207	Capacitor, 10 uF/10V, Radial, Electric
CR1	734511	Diode, Switch, Ultrafast, VF5400
CR2	760421	Diode, 1 Amp, Schottky, 1N5819
CR3-CR14	709100	Diode, Silicon, Switching, 1N914
CR15, CR16	722058	Diode, Rectifier, 1 Amp, Fast Recovery, 1N4933
CR29	746184	Diode, Rectifier, 1 Amp, 100V, 1N4002
J1	770150	Connector, Flex Cable, .100 Centers, 17 Position
J2	752076	Terminal, Disconnect, .110 Tab
L1	781727	Inductor, Vertical, 4 Pin, 160 uH, 6 Amp
L2	781901	Inductor, Axial, 100 uH
LS1 (Beeper)	781914	Audio Transducer, 12V
Q1	760812	Transistor, P-Channel, 50V, IRF9Z20
Q2, Q4-Q8	702518	Transistor, NPN, Switching, 2N3904
Q3	703714	Transistor, PNP, Switching, 2N3906
Q9	770302	Transistor, NPN, Darlington, 2N6045
Q10	740344	Transistor, PNP, Darlington, 2N6035
Q11	743086	Transistor, NPN, Darlington, 2N6039

COMPONENT DIAGRAM
CONTROL PC BOARD
MODELS : 5AEE, 5ACE,
5AWE, 5AKD,
5AGB, 5APE,
5ADD

P/N 783100
P/N 783102

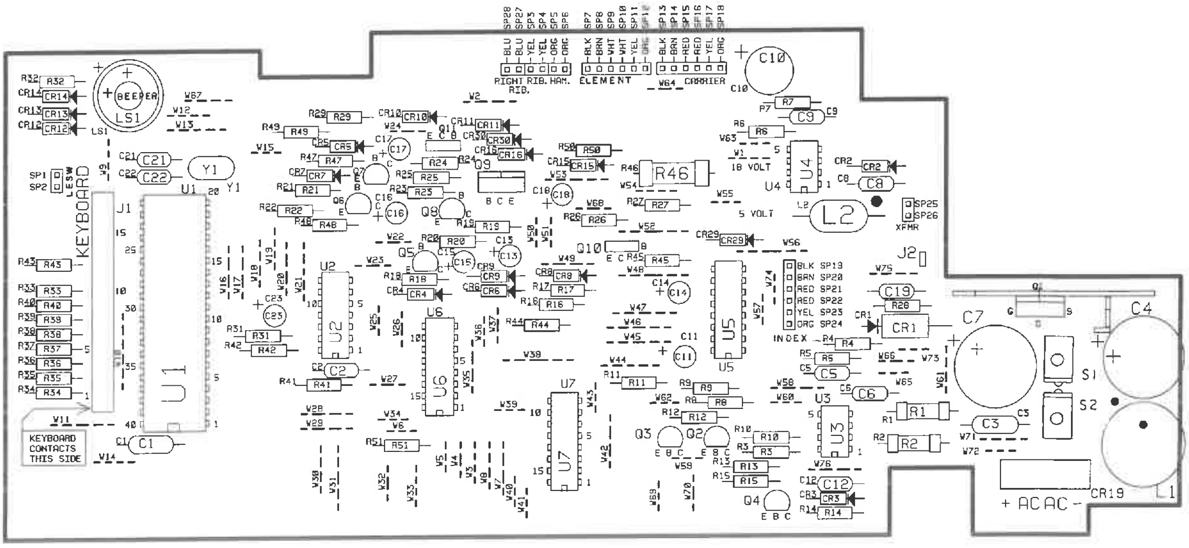

COMPONENT	PART NUMBER	DESCRIPTION
R1	760450	Resistor, 470 Ohms, 1 W, 5%
R2	760455	Resistor, 680 Ohms, 1 W, 5%
R3	746938	Resistor, 390 Ohms, 1/4 W, 5%
R4	748289	Resistor, 137 K Ohms, 1/4 W, 1%
R5, R6	748290	Resistor, 10.2 K Ohms, 1/4 W, 1%
R7	748291	Resistor, 3.4 K Ohms, 1/4 W, 1%
R8, R14, R29, R31, R34-R40	701287	Resistor, 39 K Ohms, 1/4 W, 5%
R9, R19, R22, R24	701263	Resistor, 100 K Ohms, 1/4 W, 5%
R10, R26	748236	Resistor, 6.2 K Ohms, 1/4 W, 5%
R11	701262	Resistor, 51 K Ohms, 1/4 W, 5%
R12	748221	Resistor, 27 K Ohms, 1/4 W, 5%
R15, R20, R25, R41, R51	701268	Resistor, 10 K Ohms, 1/4 W, 5%
R13	701282	Resistor, 150 K Ohms, 1/4 W, 5%
R16	748231	Resistor, 270 K Ohms, 1/4 W, 5%
R17	701270	Resistor, 47 K Ohms, 1/4 W, 5%
R18, R21, R47	748235	Resistor, 62 K Ohms, 1/4 W, 5%
R23	748226	Resistor, 82 K Ohms, 1/4 W, 5%
R27	701267	Resistor, 2.7 K Ohms, 1/4 W, 5%
R28	727473	Resistor, 4.7 Ohms, 1/4 W, 5%
R32, R33, R43, R48, R49	701252	Resistor, 220 Ohms, 1/4 W, 5%
R42	748225	Resistor, 11 Ohms, 1/4 W, 5%
R50	781720	Resistor, 11 Ohms, 1/4 W, 5%, Wire Wound
R44, R45	701280	Resistor, 1.8 K Ohms, 1/4 W, 5%
R46	781501	Resistor, 220 Ohms, 2 W, 5%
S1, S2	773341	Spring, Switch Contact
SP1-SP28	748858	Stake Pin, .025 Square
U1	750902	IC, Microprocessor, 8052 AH, U.S. And Canadian American
U1	750882	IC, Microprocessor, 8052 AH, International
U2	724700	IC, Hex Buffer, Open Collector, 7406
U3, U4	782900	IC, Power Supply Controller, MC34063A
U5-U7	781722	IC, Quad Driver, Inverting, L-6220
W1, W2, W9-W73, CR17-CR28	705294	Jumper Wire
Y1	782200	Resonator, Ceramic, 12 MHz

COMPONENT DIAGRAM
CONTROL PC BOARD
MODELS : 5AEF, 5ACF,
5AWF, 5APF,
5ASG, 5ADE

P/N 773901
P/N 773918

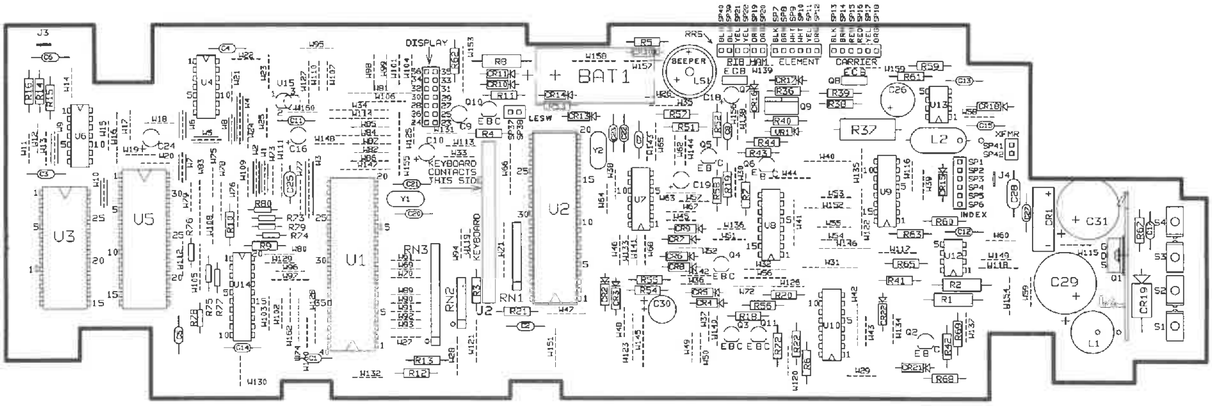

COMPONENT	PART NUMBER	DESCRIPTION
BAT 1	747288	Battery, Ni-Cad, 2 Cell, 2.3V
C1, C2, C4, C6, C7, C14, C15, C27	700341	Capacitor, .01uF/50V, Axial, Ceramic, ±20%
C3, C5, C8, C11	741566	Capacitor, .1uF/50V, Axial, Ceramic, +80/-20%
C9, C10, C16, C18, C19	770229	Capacitor, 1uF/50V, Radial, Electric
C12	741575	Capacitor, 390pF/100V, Axial, Ceramic, ±5%
C13	741576	Capacitor, 270pF/100V, Axial, Ceramic, ±5%
C20, C21, C22, C23	700365	Capacitor, 30pF/100V, Axial, Ceramic, ±5%
C24	730012	Capacitor, 10uF/16V, Radial, Electric, ±20%
C25	741574	Capacitor, 56pF/50V, Axial, Ceramic, ±10%
C26	730033	Capacitor, 1000uF/6.3V, Radial, Electric,
C28	741573	Capacitor, .1uF/100V, Axial, Ceramic, ±20%
C29	730022	Capacitor, 3300uF/25V, Radial, Electric, ±20%
C30	736105	Capacitor, 470uF/6.3V, Radial, Electric,
C31	770218	Capacitor, 2200uF/35V, Radial, Electric,
CR1	734802	Bridge Rectifier, 4 Amp, 100V
CR4-9, CR13, CR14, CR21, CR22, CR30	709100	Diode, Switch, 100V, 1N914
CR15	700521	Diode, Rectifier, 50V, 1N4001
CR16, CR17	722058	Diode, 1 Amp, Fast Recovery, 1N4933
CR18, CR10	760421	Diode, 1 Amp, Schottky, 1N5819
CR19	760479	Diode, 3 Amp, Schottky, MBR 350
J2	770150	Connector, .100, 17 Position Flex Cable
J3, J4	752076	Terminal-Faston, .110 Tab
L1	783573	Inductor, Axial, 80uH, 6 Amp
L2	781901	Inductor, Axial, 100uH,
LSI	781914	Audio Transducer, 12V
Q1	760812	MOSFET, P-Channel, 50V, 1RF9Z20
Q2-Q6, Q10, Q11	702518	Transistor, NPN, Switching, 2N3904
Q7	743086	Transistor, NPN, Darlington, 2N6039
Q8	740344	Transistor, PNP, Darlington, 2N6035
Q9	783574	MOSFET, N-Channel, 60V, MTP3055

COMPONENT DIAGRAM
CONTROL PC BOARD
MODELS : 5AEF, 5ACF,
5AWF, 5APF,
5ASG, 5ADE

P/N 773901
P/N 773918

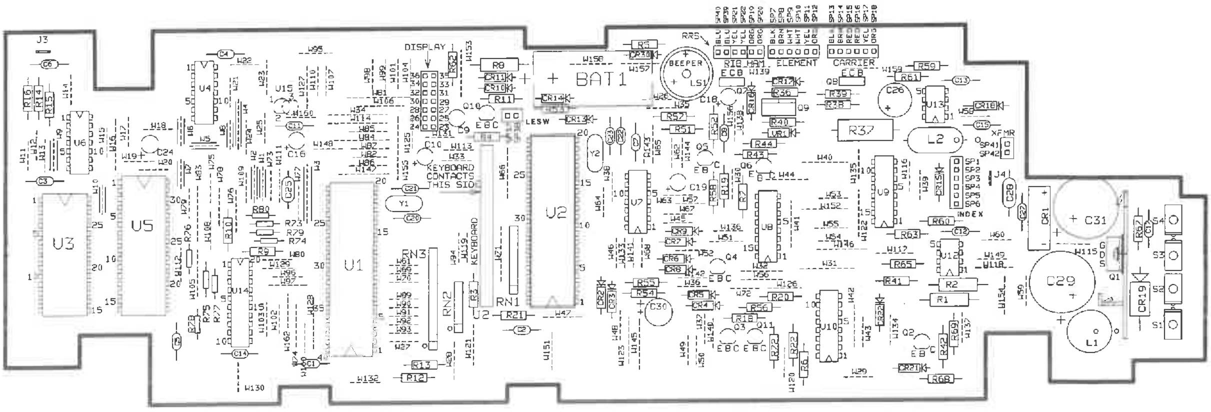

COMPONENT	PART NUMBER	DESCRIPTION
R1	760450	Resistor, 470 Ohms, 1W, 5%
R2	760455	Resistor, 680 Ohms, 1W, 5%
R3, R4, R5-R7, R62	701252	Resistor, 220 Ohms, 1/4W, 5%
R9-R11	701271	Resistor, 470 Ohms, 1/4W, 5%
R12, R13	748225	Resistor, 11 Ohms, 1/4W, 5%
R14-R16, R21, R22, R68	701268	Resistor, 10 K Ohms, 1/4W, 5%
R18, R41-R43	701299	Resistor, 8.2 K Ohms, 1/4W, 5%
R19	701275	Resistor, 22 K Ohms, 1/4W, 5%
R20, R44, R56	701267	Resistor, 2.7 K Ohms, 1/4W, 5%
R36	781720	Resistor, 11 Ohms, 1/4W, 5%, Wire Wound
R37	781501	Resistor, 220 Ohms, 2W, 5%
R38-R40	701280	Resistor, 1.8 K Ohms, 1/4W, 5%
R51, R52, R57	748235	Resistor, 62 K Ohms, 1/4W, 5%
R53, R69	701287	Resistor, 39 K Ohms, 1/4W, 5%
R54, R55, R58	701264	Resistor, 120 K Ohms, 1/4W, 5%
R59	748291	Resistor, 3.4 K Ohms, 1/4W, 1%
R60, R61	748290	Resistor, 10.2 K Ohms, 1/4W, 1%
R63	748289	Resistor, 137 K Ohms, 1/4W, 1%
R65	746938	Resistor, 390 Ohms, 1/4W, 5%
R72	748223	Resistor, 150 Ohms, 1/4W, 5%
R73-R80	771001	Resistor, 390 Ohms, 1/8W, 5%
RN1	752158	Resistor, Network, 39 K Ohms, 8 Pins, 7 Resistors
RN2	782802	Resistor, Ladder, 15 K Ohms, 6 Pins
RN3	782801	Resistor, Pack, 30 K Ohms, 12 Pins, 6 Resistors
S1-S4	773341	Spring, Switch Contact
SP1-SP42	748856	Stake Pin, .025 Square

COMPONENT DIAGRAM
CONTROL PC BOARD
MODELS : 5AEF, 5ACF,
5AWF, 5APF,
5ASG, 5ADE

P/N 773901
P/N 773918

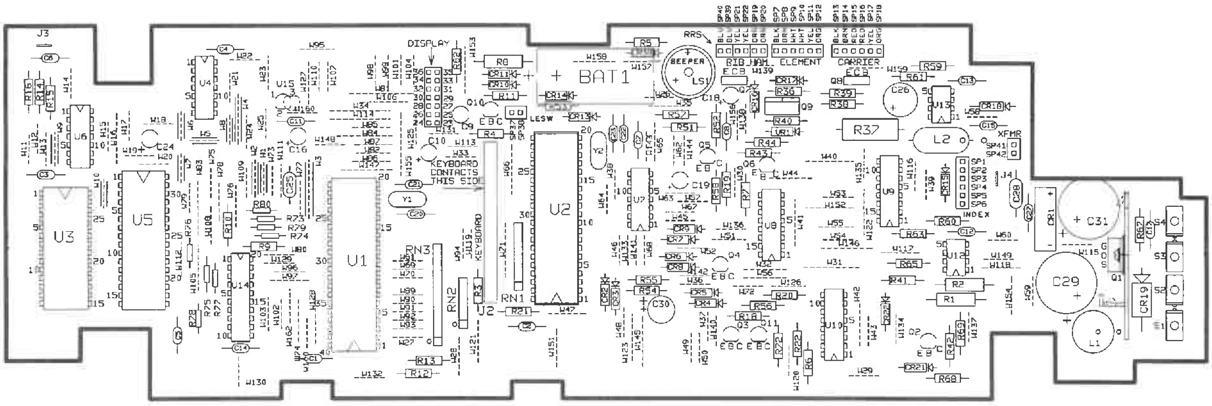

COMPONENT	PART NUMBER	DESCRIPTION
U1	752400	IC, Microprocessor, 8032 AH, Master
U2	750966	IC, Microprocessor, 8052 AH, Slave
U3	781912	IC, CMOS, 8 K x 8 Static Ram, 6264
U4	709683	IC, Quad 2 Input And Gate, 74LS08
U5	750905	IC, 1 Meg Rom, USA and Canada
U6	782616	IC, Quad 2 Input CMOS Nand Gate, 74HC132
U7	724700	IC, Hex Inverter, Open Collector, 7406
U8-U10	781722	IC, Quad Driver, w/Inverters, L-6220
U12, U13	782900	IC, Power Supply Controller, MC34063A
U14	709684	IC, Tri-State Octal Latch, 74LS373
U15	736603	IC, Reset, MC34064
VR1	781740	Diode, Zener, 5.1V, 1.5W, 1N5918
W1-W162	705294	Jumper Wire
Y1, Y2	782200	Resonator, Ceramic, 12 MHz
For International Models Only		
U5	750908	IC, 2 Meg Rom, French/Canadian
U5	750909	IC, 2 Meg Rom, Spanish/American
U5	750910	IC, 2 Meg Rom, United Kingdom
W40	705294	Jumper Wire, French/Canadian
W40	765829	Diode, Zener, 2.4V, .5W, IN5221A, Spanish/American, United Kingdom

Part Number	Page Number	Part Number	Page Number	Part Number	Page Number	Part Number	Page Number
102271	12	730012	20	748231	19	760479	20
105090	11	730022	18	748235	19	760812	18
133250	9	730022	20	748235	21	760812	20
133250	13	730033	18	748236	19	765829	22
428090	12	730033	20	748289	19	768661	10
428090	13	734511	18	748289	21	768662	10
467980	11	734802	20	748290	19	768669	10
467980	12	736104	18	748290	21	768671	10
700341	18	736105	20	748291	19	770150	18
700341	20	736111	18	748291	21	770150	20
700365	18	736112	18	748562	14	770161	12
700365	20	736603	22	748856	21	770162	14
700368	18	740004	11	748858	19	770164	12
700521	20	740084	9	749734	14	770165	15
701252	19	740111	12	749735	14	770172	10
701252	21	740143	11	749789	14	770175	11
701262	19	740257	9	749841	12	770176	9
701263	19	740344	18	749965	11	770180	15
701264	21	740344	20	750056	15	770199	15
701267	19	741565	18	750075	15	770207	18
701267	21	741566	20	750077	15	770218	18
701268	19	741573	18	750882	19	770218	20
701268	21	741573	20	750902	19	770229	20
701270	19	741574	20	750905	22	770277	12
701271	21	741575	18	750908	22	770280	14
701275	21	741575	20	750909	22	770285	12
701280	19	741576	18	750910	22	770290	12
701280	21	741576	20	750966	22	770292	12
701282	19	743086	18	751057	9	770294	12
701287	19	743086	20	751057	12	770295	12
701287	21	744491	3	751057	13	770296	14
701299	21	744491	5	751057	14	770297	11
702518	18	745321	11	751437	15	770297	14
702518	20	746184	18	751719	10	770298	12
703714	18	746938	19	752076	18	770302	18
705294	19	746938	21	752076	20	770317	10
705294	22	747258	2	752158	21	770432	14
709100	18	747258	4	752400	22	770434	16
709100	20	747258	10	752559	15	770434	16
709683	22	747258	11	752637	14	770435	9
709684	22	747258	12	752734	11	770672	10
717087	9	747258	14	752735	11	770686	13
722058	18	747258	17	753580	15	770756	3
722058	20	747258	17	753587	15	770757	3
724700	19	747288	20	760421	18	770757	5
724700	22	748221	19	760421	20	770829	2
724940	16	748223	21	760450	19	770829	4
727473	19	748225	19	760450	21	770833	12
729572	2	748225	21	760455	19	770952	15
729572	4	748226	19	760455	21	770952	15

Part Number	Page Number	Part Number	Page Number	Part Number	Page Number	Part Number	Page Number
771001	21	772686	2	773765	2	778430	7
771260	11	772686	3	773766	2	778431	7
771271	9	772700	2	773766	3	778432	7
771411	12	772700	4	773767	4	778433	7
771419	14	772703	3	773767	5	778434	7
771427	9	772883	4	773768	4	778435	7
771429	14	772920	14	773768	5	778436	7
771460	15	772920	14	773769	4	778437	7
771463	14	773046	9	773770	4	778439	7
771464	12	773047	13	773773	4	778440	7
771465	9	773049	14	773774	4	778441	7
771466	15	773145	15	773845	17	778442	7
771468	15	773340	12	773846	17	778443	7
771597*	16	773341	19	773901	17	778444	7
771610	15	773341	21	773918	17	778445	7
771611	15	773560	2	773960	4	778446	7
771617	9	773560	4	773961	5	778447	7
771695	16	773561	2	773962	4	778448	7
771696	16	773561	4	773962	5	778449	7
771724	16	773580	16	773963	5	778450	7
771794	14	773592*	16	773964	4	778454	7
771796	13	773593*	16	773965	4	778455	7
771797	13	773600	4	778280	6	778456	7
771807	13	773601	5	778281	6	778457	7
771809	13	773602	4	778282	6	778458	7
771810	13	773603	4	778317	6	778459	7
771818	13	773620	4	778347	6	778460	7
771826	13	773621	4	778401	7	778460	8
771827	14	773640	2	778402	7	778468	7
771836	14	773641	2	778403	7	778468	8
771843	13	773693	2	778404	7	778470	7
771847	13	773693	3	778405	7	778471	7
771910	2	773693	4	778406	7	778480	7
771910	4	773693	5	778407	7	778482	7
771911	10	773694	2	778407	8	778483	7
771912	13	773694	3	778408	7	778484	7
771917	13	773694	4	778408	8	778577	8
771930	15	773694	5	778409	7	778578	8
771932	15	773695	3	778409	8	778579	8
771934	15	773695	5	778410	7	778580	8
771935	15	773696	3	778410	8	778581	8
771935	15	773696	5	778411	7	778582	8
771954	9	773755	9	778412	7	778602	8
772020	14	773760	2	778413	7	778603	8
772111	13	773760	3	778414	7	778604	8
772636	10	773761	2	778423	7	778605	8
772636	17	773761	3	778424	7	778606	8
772636	17	773762	2	778427	7	778608	8
772685	2	773763	2	778428	7	778609	8
772685	3	773764	2	778429	7	778610	8

Part Number	Page Number
778611	8
778612	8
778613	8
778615	8
778616	8
778617	8
778618	8
778619	8
778620	8
778640	7
778641	7
778642	7
778643	7
778644	7
778645	7
778646	7
778647	7
778648	7
778649	7
778650	7
778651	7
778652	7
778653	7
778654	7
778655	7
778656	7
778657	7
778658	7
778659	7
778660	7
778661	7
778662	7
778663	7
778664	7
778665	7
778666	7
778667	7
778668	7
778669	7
778670	7
778671	7
778672	7
778673	7
778674	7
778675	7
778676	7
778677	7
778678	7
778679	7
778680	8
778681	8
778682	8
778683	8
778684	8
778685	8
778686	8
778687	8
778688	8
778689	8
778690	8
778691	8
778692	8
778693	8
778694	8
778695	8
778696	8
778697	8
778699	8
778700	8
778804	6
778805	6
778807	6
778850	6
778851	6
778852	6
778853	6
778854	6
778855	6
778856	6
778857	6
780411	9
780424	4
780450	2
780450	4
780451	2
780451	4
781494	12
781501	19
781501	21
781720	19
781720	21
781722	19
781722	22
781725	12
781727	18
781740	22
781901	18
781901	20
781910	10
781910	17
781912	22
781914	18
781914	20
781952	16
781952	16
782117	13
782200	19
782200	22
782329	17
782416	17
782616	22
782619	11
782801	21
782802	21
782900	19
782900	22
783100	17
783102	17
783190	9
783191	9
783193	11
783194	9
783205	4
783573	20
783574	20
783598	2
783599	3
783600	3
783601	3
783604	4
783605	5
783606	5
783832	9
784110	2
784110	3
784112	2
784112	3

SMITH CORONA

May 15, 1989

NOTICE OF CONTENTS

The following ***fifteen*** items are enclosed in this mailing, along with two new 3 ring binders (one for 5A Series Version 2 and one for 5F Series).

Please inspect this package and insert each in the proper binder if applicable.

5A Series Version 2: ***New Blue Binder***	1 Bulletin: #1 1 Service Manual, 3-0770 1 Parts Manual, 3-0771
5F Series: ***New Gray Binder***	1 Bulletin: #1 1 Service Manual, 3-0772 1 Parts Manual, 3-0773
5D Series: *Please insert in*	*White/Blue 3-Ring Binder* 1 Service Manual, 3-0774 1 Parts Manual, 3-0775 1 Bulletin: #7
5E Series: *Please insert in*	*White/Green 3-Ring Binder* 1 Publication Release -- 3-0767A
Electronic Miscellaneous:	1 Bulletin: #16
Index Pages:	1 5A Series 1 Electronic Miscellaneous 1 5D Series
6, 7, 8 & 9 Series: Electro-Mechanical Typewriters	1 Bulletin #89

Printed in U.S.A.

SMITH CORONA

SERVICE BULLETIN

TO: Technical Service & Training
Regional Service Managers
Service Locations
Canada & International
Electronic Servicing Dealers

NO: 1

PRODUCT:
5A SERIES VERSION 2
ELECTRONIC TYPEWRITERS

SUBJECT: **SERVICING 5A SERIES VERSION 2 ELECTRONIC TYPEWRITERS**

DATE: May 15, 1989

This Bulletin provides information on the service support programs for new 5A Series Version 2 Electronic Typewriters. These models can be identified by the "5A" prefix in the serial number, and at this time include the following:

Model Name	Model Prefix	Model Name	Model Prefix	Model Name	Model Prefix
XL 1500	5AEE	Mark VI	5AWE	300 DLE	5ADD
XD 4600	5AEF	Mark XII	5AWF	400 DLD	5ADE
SL 500	5ACE	Deville 450	5AKD	CXL 4200	5APE
SD 650	5ACF	DX 4000	5ASG	CXL 5100	5APF
Premier 100	5AGB				

Service Features:

The new 5A Series Version 2 Electronic Typewriters include several Keyboard entered service features originally introduced on 5A and 5P Series including self-typing, energizing the Element Motor for making adjustments, software version identification, memory clear, microprocessor reset, and RAM check. These features are discussed in detail on page 6-13 of the Troubleshooting section of the Service Manual (Form 3-0770).

The Carrier is similar to the 5A and 5P Series design, and includes the Right Ribbon System. In all, there are eight adjustments which can be made with common service tools. A redesigned Left End Switch eliminates the Left End Switch adjustment. No special test equipment, tools, or gages are required to service the machine, and most adjustments can be accessed with only the casing top removed.

5A Series Version 2 Owner's Manuals:

Models 5AEE, 5ACE, 5ADD, 5AWE, 5APE, 5AGB, 5AKD

Part No.	Country/Language
783598	USA and Canada
783599	French Canadian
783600	Spanish American
783601	United Kingdom

Models 5AEF, 5ACF, 5AWF, 5APF, 5ADE

Part No.	Country/Language
783604	USA & Canada
783605	French Canadian
783606	Spanish American
783607	United Kingdom

- Over -

Printed in U.S.A.

Service Publications:

Form Number	Manual Description
3-0770	Service Manual for 5A Series Version 2 Electronic Typewriters
3-0771	Parts Manual for Models XL 1500, XD 4600, SL 500, SD 650, Mark VI, Mark XII, Deville 450, DX 4000, 300 DLE, 400 DLD, CXL 4200, CXL 5100, and Premier 100

Updates to these publications and all other publications will be made by a **Publications Bulletin** that has the same base form number as the publication being updated. For example, the first update to the Service Manual (3-0770) will be Publications Bulletin 3-0770A, the next update will be 3-0770B, and so on. Updates should be incorporated into the Manual. Reprints of a manual (i.e. 3-0770-1, 3-0770-2, etc.) will include all previously issued Publications Bulletins as indicated on the Contents page of the reprint.

Service Bulletins:

Service Bulletins for the 5A Series Version 2 Electronic Typewriters will be blue in color. They will be released when product changes occur and when additional information is required. Bulletins are consecutively numbered; however, number gaps in your Bulletins are likely to occur because Bulletins are issued only to those they apply to. For example, Dealers would not receive an exclusive Bulletin on a private label model. **Note:** Dealers receive one complimentary copy of each publication per mailing. Additional copies may be ordered from your parts ordering source. Dealers should contact their Regional Service Manager or sales representative to get on a mailing list.

Service Tools: The tools required to service 5A Series Version 2 Electronic Typewriters are listed on the Contents Page of the Service Manual (Form 3-0770). Most should be available from local suppliers, but may be ordered from your Smith Corona parts ordering source.

Lubricants: Recommended lubricants are listed in the Lubrication and Cleaning Section of the Service Manual (Form 3-0770).

Ordering Parts: USA Dealers should refer to the current Service Parts Policies and Procedures form for parts ordering and parts return information.

Service Training: Smith Corona offers one day service training programs in the field. Contact your Regional Service Manager or sales representative for details. Trainees should bring the Service Manual, tools, and a machine to the training class.

Prices: Prices of parts, tools, etc., are indicated in the current Smith Corona Electronic Parts Price List. Also included are exchange prices for out of warranty replacement of PC Boards. Service Manual prices are $15.00; Parts Manual prices are $2.00. Service Bulletins are no charge when requested. All may be ordered through National Service Stores.

Smith Corona reserves the right to discontinue parts at any time and/or to furnish substitutes.

SMITH CORONA

SERVICE BULLETIN INDEX

5A SERIES

BULLETIN NUMBER	ISSUE DATE	SUBJECT
1	5/20/86	Servicing 5A Series Electronic Typewriters **Remarks:** Introduces service and parts information for Models 5AEA (XL 1000), 5ACA (SL 80), and related private brands.
2A	9/15/86	Carrier Capstan Clip (250159) **Remarks:** Reissued 9/15/86 to announce reduced price.
3	8/8/86	Redesigned Element Pusher Spring (770924) **Remarks:** Lighter Pusher Spring eliminates random strobing.
7A	3/24/87	Service Training Videotape **Remarks:** Reissued 3/24/87 as a reminder of videotape availability.
8	9/15/86	Transformer Failure on 5A Series Typewriters **Remarks:** Describes how to check Bridge Rectifier when replacing failed Transformer.
9	11/7/86	Lid Switch Actuator (771057) **Remarks:** Resolves Lid Switch actuation problems.
11	2/16/87	Inductor L1 Lead Breakage **Remarks:** Provides information for repairing Inductor L1 with broken leads.
12	2/16/87	Anti-Strobing Software and New PC Board for 5A Series Typewriters **Remarks:** Announces new Control PC Board and Element Gear Spring which reduce strobing.
16	5/8/87	Servicing New 5A Series Typewriters **Remarks:** Introduces service and parts information for Models 5AEB (XL 2000), 5ACB (SL 105), and related private brands.
19	12/18/87	Type "B" Keybutton Removal **Remarks:** Contains unique Type "B" Keybutton Removal procedures.
23	4/1/88	Zinc Die Cast Hammer (752637) **Remarks:** Announces redesigned Hammer and revised adjustment specification.
24	6/27/88	Control PC Board Troubleshooting Guide **Remarks:** For Models XL 1000, SL 80, and related private brands.
25	6/27/88	Servicing New 5A Series Electronic Typewriters **Remarks:** Introduces service and parts info for new 5A Models.
26	9/1/88	Carrier Capstan Scissor Gear Springs **Remarks:** Identifies Interchangeable and Non-Interchangeable Spring and Carrier Motor combinations.
27	9/30/88	Redesigned Deck & Paper Bail **Remarks:** Decks & Paper Bails redesigned to prevent breakage.
28	11/30/88	"Made in USA" SL 500 (5ACC) Typewriters **Remarks:** Lists new parts for SL 500 produced in USA.

- OVER -

Printed in U.S.A.

BULLETIN NUMBER	ISSUE DATE	SUBJECT
29	11/30/88	Redesigned Casing Base and Carrier Restraint **Remarks**: Lists new and associated parts for all current 5A Models.
→ 30	1/16/89	Short Carrier Capstan Cable Assembly **Remarks**: Unique parts and service information.
→ 31	1/16/89	New Control PC Board (USA Only) **Remarks**: New USA Control PC Board and Interchangeability information.
→ 32	1/16/89	Carrier Rack Drive System **Remarks**: Unique parts and service information.
→ 33	3/17/89	Ground Cable Assembly Modification **Remarks**: New Assembly and attaching Screw assure positive connection to Transformer.
→ 34	3/17/89	5A Series 5 Volt Regulator Failure **Remarks**: Announces improved 5 Volt Regulator.

- AND -

Electronic Miscellaneous Bulletins #11 (dated 11/30/88), #12 & #13 (dated 1/16/89), and #15 (dated 3/1/89).

Information from the following Bulletins is now incorporated in Parts Manual, Form 3-0754.

4	9/15/86	Redesigned Paper Table (748991). Eliminates Adjustment #10. New parts can be installed as a group.
5	9/15/86	Redesigned Linespace Pinion Pivot (752319). Eliminates spacer on new Frame Assembly (770985). New parts are not interchangeable with old.
6	9/15/86	Carrier Motor Gear (364646). Announces availability of replacement Gear for Carrier Motor.
10	11/7/86	Correction Lift Spring (428090). Illustrates correct spring positioning for consistent lift of Correction Bail.
13	2/16/87	Redesigned Correction Bail Assembly (771058). New design Correction Bail and Bumper prevent Bail from sticking.
14A	1/4/88	5A Series PC Board Components. Lists all electronic components for 5A Series PC Boards. Revised on 1/4/88 to correct part numbers.
15	3/24/87	5A Series Casing Bases. Announces unique Casing Bases for country of manufacture.
17	11/2/87	Redesigned Lid Switch Actuator. New design uses left end switch as lid switch. Bulletin contains information for using new design jacketing parts on machines with previous design lid switch.
18	11/16/87	Redesigned Lid Switch Actuator and Type "B" Keyboard. New design keyboard with lid switch announced in Bulletin 18. Bulletin contains information for using new design jacketing parts on machines with previous design keyboards and lid switch.
20	1/29/88	Type "B" Keyboards on XL 2000, SL 105, & Mark X. Parts and Service Information for Type "B" Keyboards used with this Model Group.
21	1/29/88	Control PC Board Components for P/N 771535. Lists all electronic components for PC Board, 771535.
22	1/29/88	XL 2000 (5AEB) Spanish American. Lists unique parts for Spanish American XL 2000 (5AEB).

ACTIVE SERVICE BULLETIN INDEX

ELECTRONIC MISCELLANEOUS

BULLETIN NUMBER	ISSUE DATE	SUBJECT
8	9/15/86	Servicing the Messenger Module RO01 **Remarks**: Provides Service and Parts Information
9	4/15/88	Computer Cables **Remarks**: Computer Cable sources for use with Smith Corona Products.
10	11/30/88	Service Circuit Breaker Tool (P/N 250181) **Remarks**: New tool for troubleshooting.
11	11/30/88	Redesigned Carrier Restraint (Models 5A, 5C, 5D, 5E, 5P) **Remarks**: Eliminates yellow shipping tubes.
12	1/16/89	Modified Keyboard Parts (Models 5A, 5C, 5D, 5E) **Remarks**: More consistent LED contact pressure.
13	1/16/89	Self-Tapping Screws (Models 5A, 5C, 5D, 5E, 5P) **Remarks**: Allows use of non-tapped holes.
14	2/1/89	Keybutton Graphics **Remarks**: Fix for characters prematurely wearing off keybuttons.
15	3/17/89	Carrier Motor (P/N 770170) (Models 5A & 5P) **Remarks**: Carrier Motor may require use of heavier Carrier Capstan Scissor Spring.
16	5/15/89	Exchange Price for PWP LCD's (Models 5C & 5D) **Remarks**: Announces exchange prices.

Please Note: Electronic Miscellaneous Bulletins sometimes apply to more than one model. Models affected are noted in Subject column above.

SMITH CORONA

5A SERIES MODELS

XL1500 (5AEC), XL2500 (5AED)
SL500 (5ACC), SL600 (5ACD)
MARK VI (5AWC), MARK XI (5AWD)

COMMITMENT TO EXCELLENCE
SMITH CORONA

PARTS MANUAL

Printed in U.S.A. Form 3-0756 © Copyright 1988 by Smith Corona Corporation

PREFACE

This comprehensive Parts Manual lists and illustrates parts and electronic components necessary for the maintenance of the following Smith Corona 5A Series Electronic Typewriters:

MODEL PREFIX	MODEL NAME	COLOR(S)	MODEL PREFIX	MODEL NAME	COLOR(S)
5ACC	SL 500	SILVER FOG	5ACD	SL 600	SILVER FOG
5AEC	XL 1500	PLATINUM	5AED	XL 2500	PLATINUM
5AKC	DEVILLE 450	SILVER FOG	5APD	CXL 4700	PLATINUM
5APC	CXL 4200	PLATINUM	5AWD	MARK XI	PLATINUM
5AWC	MARK VI	PLATINUM	5AGA	PREMIER 100	SILVER FOG

Unique International parts are listed separately on each page where applicable. All Keybuttons are listed on the same page with a country designator after the item description -- see the Keyboard Codes at the top of each page for Color and Country.

A Reference Number is used on parts illustrations, and a Component Number is used for each Component on the Control PC Board diagrams. The number is listed numerically in the parts listing beneath the illustration or diagram, and refers directly to the part number.

When an illustrated part has variations in appearance, color, voltage, etc., the reference number appears more than once in the "REF" or "COMPONENT" column. Use extreme care in selecting parts in these areas.

If the part number is known, the page on which it is listed can readily be found by reference to the numerical parts listing at the end of the Manual.

ORDERING INSTRUCTIONS: State the correct part number on all parts orders. State additional information if asked for. It is not necessary to state the part name unless the part number is not known. Do not order by reference numbers.

NOTICE

Smith Corona encourages PC Board repair by qualified technicians. If, however, after trying to repair a PC Board, the Board still does not work properly, return the Board to Smith Corona National Service Stores for warranty or repair exchange.

IMPORTANT: SMITH CORONA DOES NOT REPLACE OR EXCHANGE DAMAGED PC BOARDS (IN OR OUT OF WARRANTY).

Boards will be returned as irrepairable and no credits or exchanges issued when:

- There are missing components
- There are damaged or lifted traces
- There are solder burns
- There is any other Board damage which makes the Board irrepairable

Smith Corona reserves the right to discontinue parts at any time and/or to furnish substitutes.

CONTENTS

PAGE NUMBER

JACKETS:

5AEC, 5ACC, 5AWC, 5AKC, 5APC, 5AGA ------------- 2

5AED, 5ACD, 5AWD, 5APD ------------------------- 3

KEYBOARD:

ORIGINAL (MODELS 5AED, 5ACD, 5AWD, 5APD ONLY) -- 4

TYPE "B" (ALL MODELS) -------------------------- 5

KEYBUTTON REFERENCE CHARTS:

ORIGINAL KEYBOARD KEYBUTTONS (PLATINUM) -------- 6

TYPE "B" KEYBOARD KEYBUTTONS (PLATINUM) -------- 7 & 8

CARRIER MOLDING, RAILS, & FRAMES ------------------ 9

CARRIER DRIVE ------------------------------------ 10

ELEMENT DRIVE ------------------------------------ 11

RIBBON DRIVE ------------------------------------- 12

RIBBON CASSETTE AND CORRECTION CASSETTE MECHANISM - 13

HAMMER --- 14

PAPER FEED (FOUR ROLLER PAPER TABLE) -------------- 15

CONTROL PC BOARDS -------------------------------- 16

TRANSFORMERS, DOMESTIC & INTERNATIONAL ------------ 17

CONTROL PC BOARD COMPONENTS:

P/N 772800 ------------------------------------ 18 & 19

P/N 772091, 772092, 772093, 772095 ------------- 20 - 22

NUMERICAL INDEX ------------------------------- 23 - 25

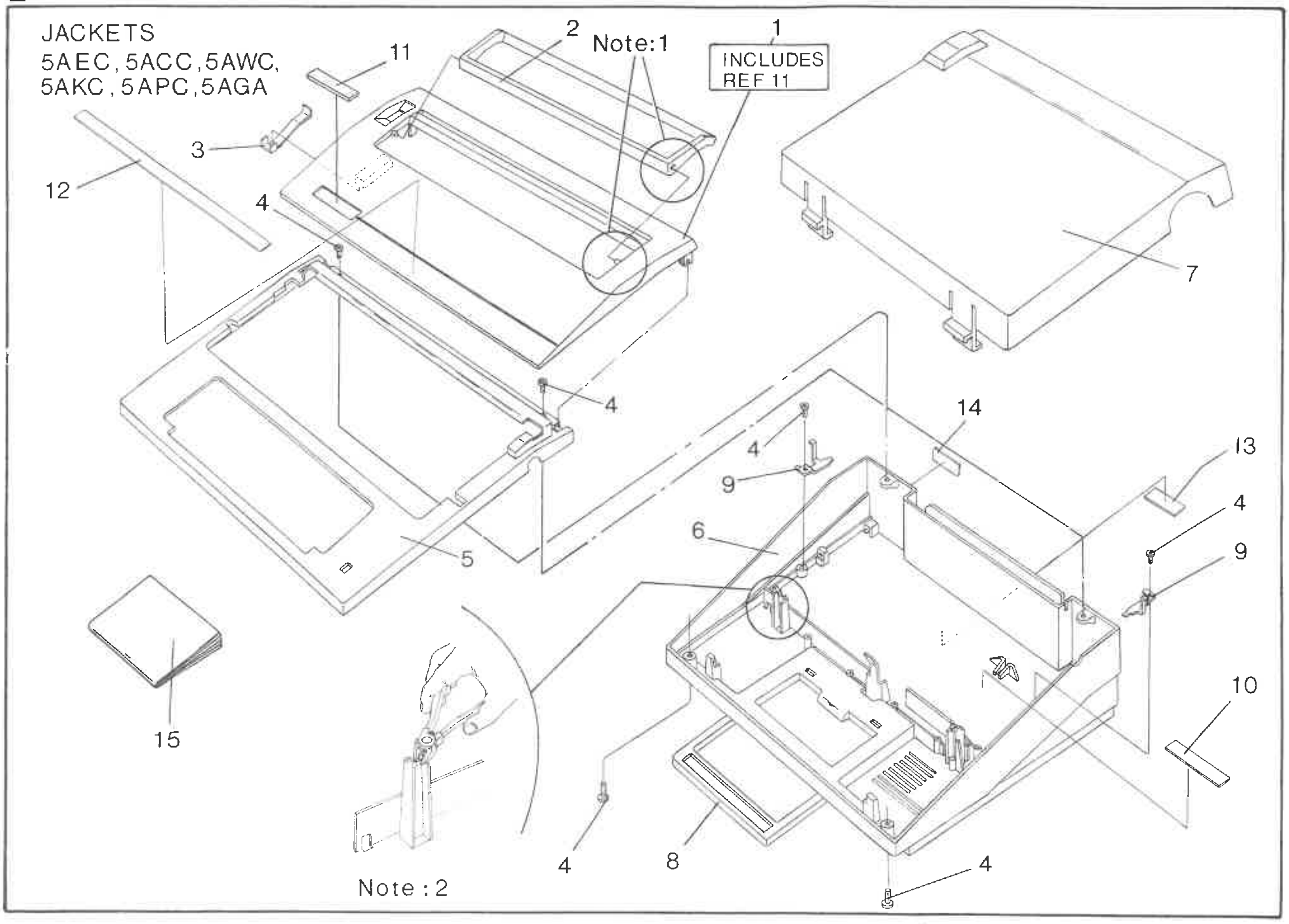

NOTE 1: DECKS AND PAPER BAILS LISTED ARE FOR LARGER, MORE RELIABLE PIVOT STUDS (SEE BULLETIN NO. 27). ORDER PAPER BAIL IF REPLACING DECK WITH SMALLER PIVOT STUDS.

NOTE 2: REMOVE ROUND STUDS WHEN USING TYPE "B" KEYBOARD.

REF	PART NUMBER	PART NAME	QTY
1	772054	Deck, Silver Fog (5ACC)	1
1	772053	Deck, Platinum (5AEC)	1
1	772057	Deck, Silver Fog (5AKC)	1
1	772058	Deck, Platinum (5AWC)	1
1	772059	Deck, Platinum (5APC)	1
1	772065	Deck, Silver Fog (5AGA)	1
2	772880	Paper Bail, Black (5ACC, 5AKC, 5AGA)	1
2	772882	Paper Bail, Platinum (5AEC, 5AWC, 5APC)	1
3	771910	Paper Bail Detent	1
4	747258	Screw	6
5	772681	Mask, Silver Fog (5ACC, 5AKC, 5AGA)	1
5	772682	Mask, Platinum (5AEC, 5AWC, 5APC)	1
6	773068	Casing Base, Silver Fog, "Made in Singapore" (5ACC, 5AKC, 5AGA)	1
6	773069	Casing Base, Platinum, "Made in Singapore" (5AEC, 5AWC, 5APC)	1
7	770014	Casing Lid, Silver Fog (5ACC, 5AKC, 5AGA)	1
7	770015	Casing Lid, Platinum (5AEC, 5AWC, 5APC)	1
8	780451	Casing Base Handle, Silver Fog	1
8	780450	Casing Base Handle, Platinum	1
9	770829	Foot Retainer	2
10	772700	Warning/Cassette Position Label	1
11	729572	Deck Nameplate	1
12	772030	Deck Overlay, Platinum	1
12	772031	Deck Overlay, Silver Fog	1
		OWNER'S MANUAL	
15	782009	Models XL 1500, Mark VI, CXL 4200, SL 500, Premier 100, Deville 450 (USA & CANADA)	1

REF	PART NUMBER	PART NAME	QTY
		INTERNATIONAL OWNER'S MANUALS	
15	781021	Models XL 1500, SL 500 (Fr/Can)	1
15	781022	Model XL 1500 (Spanish/American)	1
		FOR INTERNATIONAL MODELS ONLY	
1	772053	Deck, Platinum, FR/CAN, SPAN/AM, UK, AUST, SINGAPORE (5AEC)	1
1	772054	Deck, Silver Fog, FR/CAN, UK (5ACC)	1
2	772880	Paper Bail, Black, FR/CAN, UK	1
2	772882	Paper Bail, Platinum, FR/CAN, SPAN/AM, UK, AUST, SINGAPORE	1
5	772681	Mask, Silver Fog, UK, FR/CAN (5ACC)	1
5	772682	Mask, Platinum, UK, SPAN/AM, AUST, SINGAPORE, FR/CAN (5AEC)	1
6	773068	Casing Base, Silver Fog, "Made in Singapore" FR/CAN (5ACC)	1
6	773069	Casing Base, Platinum, "Made in Singapore" FR/CAN, SPAN/AM (5AEC)	1
6	773070	Casing Base, Platinum, "Made in Singapore" UK, AUST, SINGAPORE (5AEC)	1
6	773071	Casing Base, Silver Fog, "Made in Singapore" UK (5ACC)	1
10	772703	Warning/Cassette Position Label FR/CAN, SPAN/AM, SINGAPORE, AUST	1
13	770756	"Made in Singapore" Electrical Rating Label, UK (5ACC)	1
13	770757	"Made in Singapore" Electrical Rating Label, UK, AUST, SINGAPORE (5AEC)	1
14	771426	"Made in Singapore" Country of Origin Label, UK (5AEC, 5ACC)	1

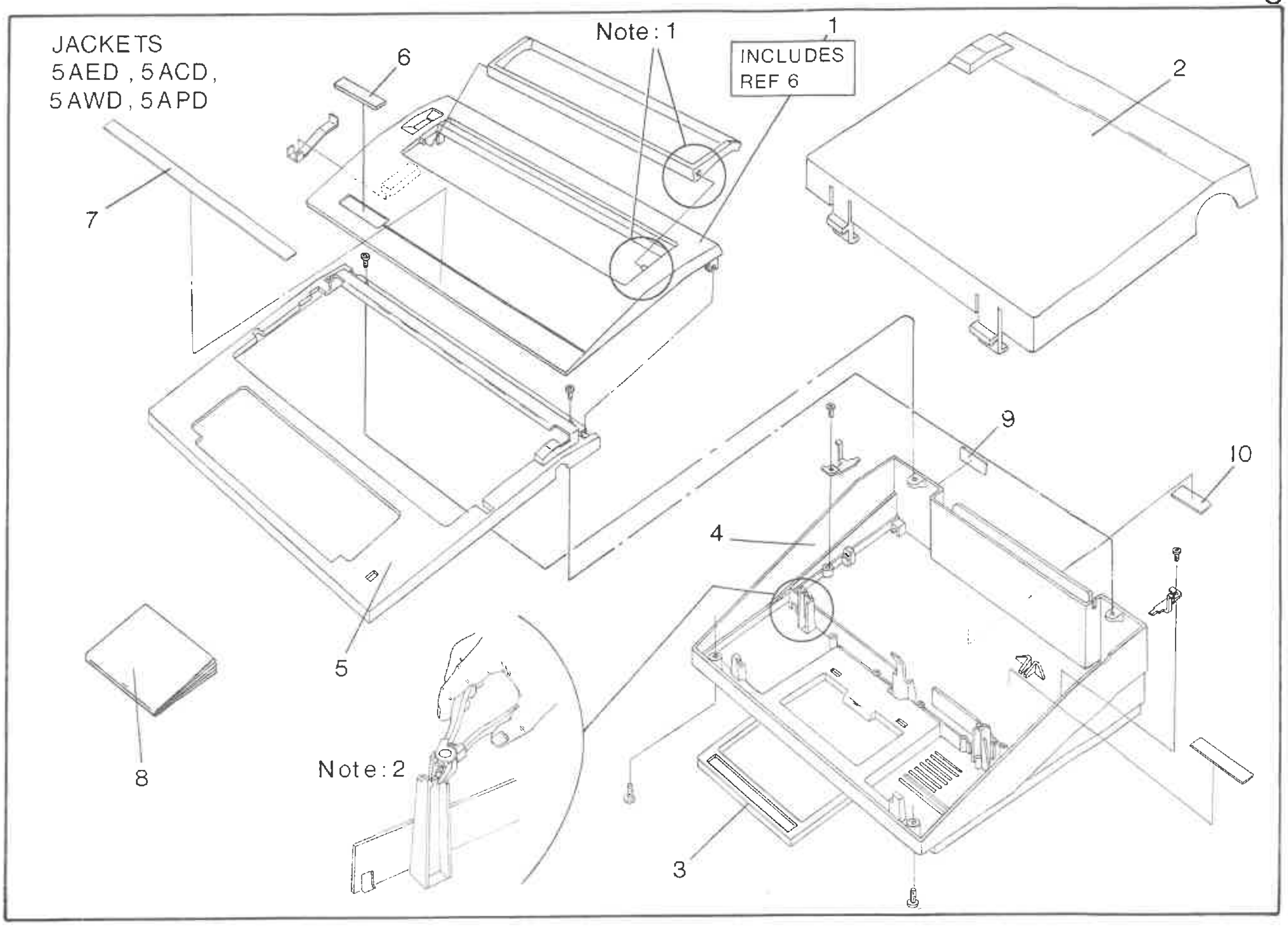

NOTE 1: DECKS AND PAPER BAILS LISTED ARE FOR LARGER, MORE RELIABLE PIVOT STUDS (SEE BULLETIN NO. 27). ORDER PAPER BAIL IF REPLACING DECK WITH SMALLER PIVOT STUDS.

NOTE 2: REMOVE ROUND STUDS WHEN USING TYPE "B" KEYBOARD.

REF	PART NUMBER	PART NAME	QTY
1	772055	Deck, Platinum (5AED)	1
1	772056	Deck, Silver Fog (5ACD)	1
1	772060	Deck, Platinum (5AWD)	1
1	772061	Deck, Platinum (5APD)	1
2	770014	Casing Lid, Silver Fog (5ACD)	1
2	770015	Casing Lid, Platinum, (5AED, 5AWD, 5APD)	1
3	780450	Casing Base Handle, Platinum	1
3	780451	Casing Base Handle, Silver Fog	1
4	773065	Casing Base, Silver Fog, "Made in USA" (5ACD)	1
4	773066	Casing Base, Platinum, "Made in USA" (5AED, 5AWD, 5APD)	1
5	772681	Mask, Silver Fog (5ACD)	1
5	772682	Mask, Platinum, (5AED, 5AWD, 5APD)	1
6	729572	Deck Nameplate	1
7	772033	Deck Overlay, Silver Fog	1
7	772032	Deck Overlay, Platinum	1
		OWNER'S MANUAL	
8	781024	Models XL 2500, Mark XI, CXL 4700, SL 600 (USA & CANADA)	1

REF	PART NUMBER	PART NAME	QTY
		FOR INTERNATIONAL MODELS ONLY	
1	772055	Deck, Platinum, UK, FR/CAN, SPAN/AM, AUST (5AED)	1
1	772056	Deck, Silver Fog, FR/CAN (5ACD)	1
4	773065	Casing Base, Silver Fog, "Made in USA" FR/CAN (5ACD)	1
4	773066	Casing Base, Platinum, "Made in USA" FR/CAN, SPAN/AM (5AED)	1
4	773067	Casing Base, Platinum, "Made in USA" UK, AUST (5AED)	1
5	772682	Mask, Platinum, UK, AUST, SPAN/AM, FR/CAN (5AED)	1
8	781025	Owners Manual, Models XL 2500, SL 600, (French/Canadian)	1
8	781026	Owners Manual, Models XL 2500, SL 600, (Spanish/American)	1
9	771425	"Made in USA" Country of Origin Label, UK (5AED)	1
10	772890	"Made in USA" Electrical Rating Label, UK, AUST (5AED)	1

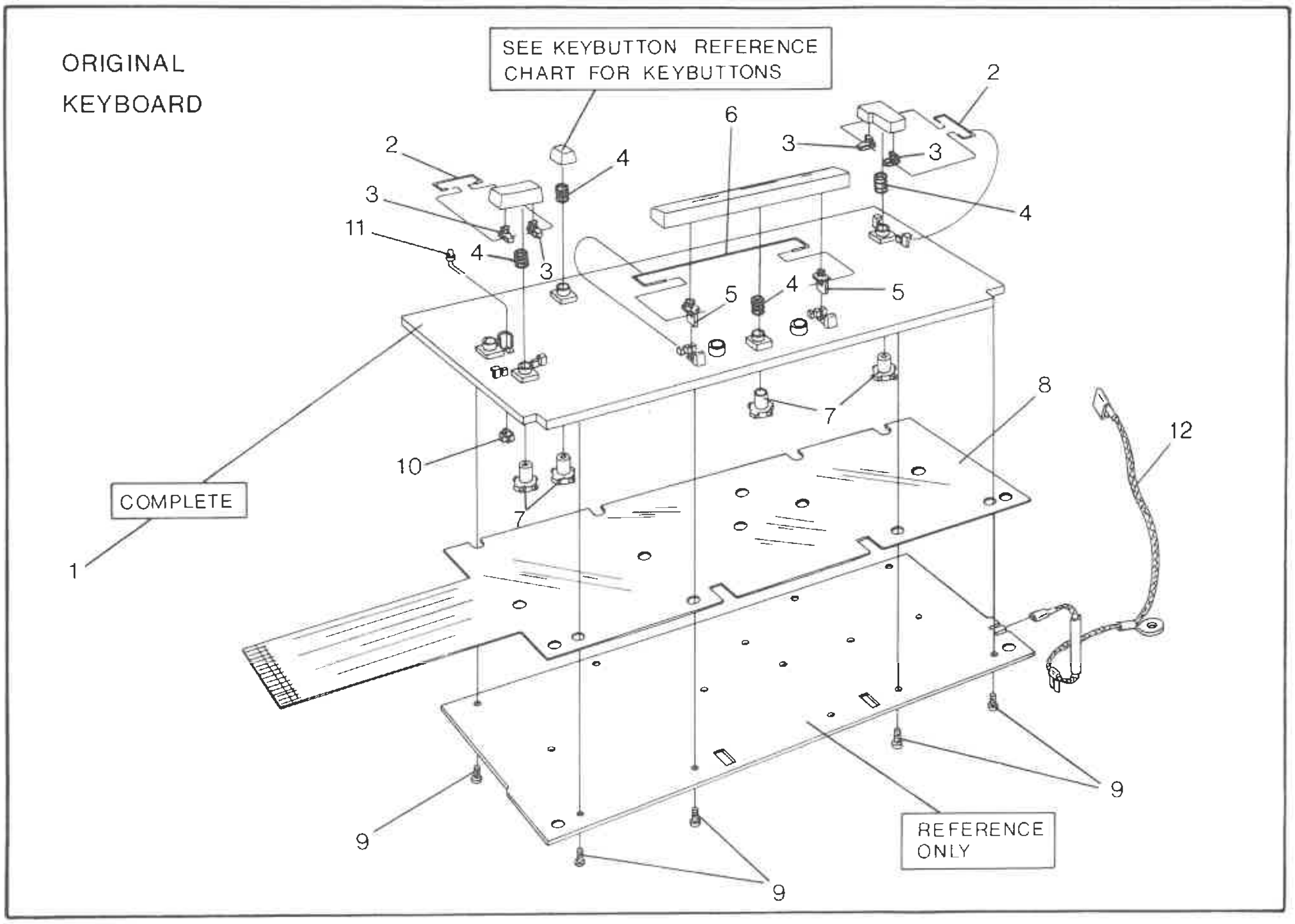

REF	PART NUMBER	PART NAME	QTY
1	771620	Keyboard Complete, Platinum USA & CAN (5AED, 5ACD, 5AWD, 5APD)	1
2	742971	Retainer Bar	2
3	742972	Pivot, Retainer Bar	4
4	742968	Spring, Keybutton	56
5	742977	Pivot, Retainer Bar	2
6	742976	Retainer Bar	1

REF	PART NUMBER	PART NAME	QTY
7	742970	Keyplunger	56
8	742973	PC Board	1
9	742978	Screw	16
10	742975	Contact, Shift Lock LED	1
11	742974	Shift Lock LED	1
12	772631	Ground Cable Assembly (5AED, 5ACD, 5AWD, 5APD)	1
	FOR INTERNATIONAL ONLY		
1	770371	Keyboard Complete, Platinum, UK (5AED)	1

TYPE "B"

KEYBOARD

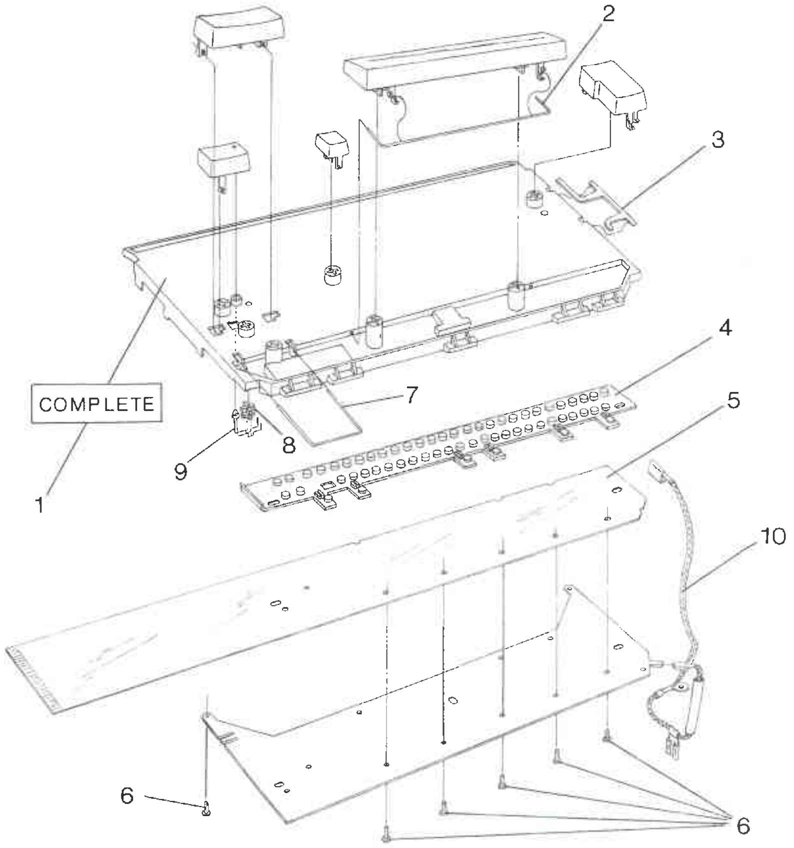

REF	PART NUMBER	PART NAME	QTY
1	778350	Keyboard Complete, Platinum, USA & CANADA, (5AEC, 5ACC, 5AWC, 5APC, 5AKC, 5AGA)	1
1	778356	Keyboard Complete, Platinum, USA & CANADA, (5AED, 5ACD, 5AWD, 5APD)	1
2	778281	Spacebar Bail	1
3	778280	Return Bail	1
4	778340	Molded Switches	1
5	778349	Flexible Circuit	1
6	780424	Self Tap Screw (T8 Torx)	12
7	778282	Left Shift Bail	1
8	778347	LED Contact Washer	1
9	778316	LED	1
10	772631	Ground Cable Assembly, (5AED, 5ACD, 5APD, 5AWD)	1
10	772632	Ground Cable Assembly, (5AEC, 5ACC, 5APC, 5AKC, 5AWC, 5AGA)	1

REF	PART NUMBER	PART NAME	QTY
		KEYBOARDS FOR INTERNATIONAL MODELS ONLY	
1	778350	Keyboard Complete, Platinum, SINGAPORE (5AEC)	1
1	778351	Keyboard Complete, Platinum, FR/CANADA (5AEC, 5ACC)	1
1	778352	Keyboard Complete, Platinum, SPAN/AM (5AEC)	1
1	778353	Keyboard Complete, Platinum, UK, AUST (5AEC, 5ACC)	1
1	778357	Keyboard Complete, Platinum, SPAN/AM (5AED)	1
1	778358	Keyboard Complete, Platinum, UK, AUST (5AED)	1
1	778359	Keyboard Complete, Platinum, FR/CAN (5AED, 5ACD)	1
1	778363	Keyboard Complete, Platinum, FR/BELGIUM (5AEC)	1
1	778362	Keybaord Complete, Platinum, NETHERLANDS (5AEC)	1

ORIGINAL KEYBOARD
KEYBUTTON
REFERENCE
CHART

FOR THE FOLLOWING MODELS ONLY:

5AED, 5ACD, 5AWD, 5APD

KEYBOARD:

UNITED STATES: 1063 KEYBOARD
ENGLISH CANADIAN: 1063 KEYBOARD
UNITED KINGDOM: 5108 KEYBOARD
AUSTRALIA: 5108 KEYBOARD

COLOR CODE:

ALL PLATINUM

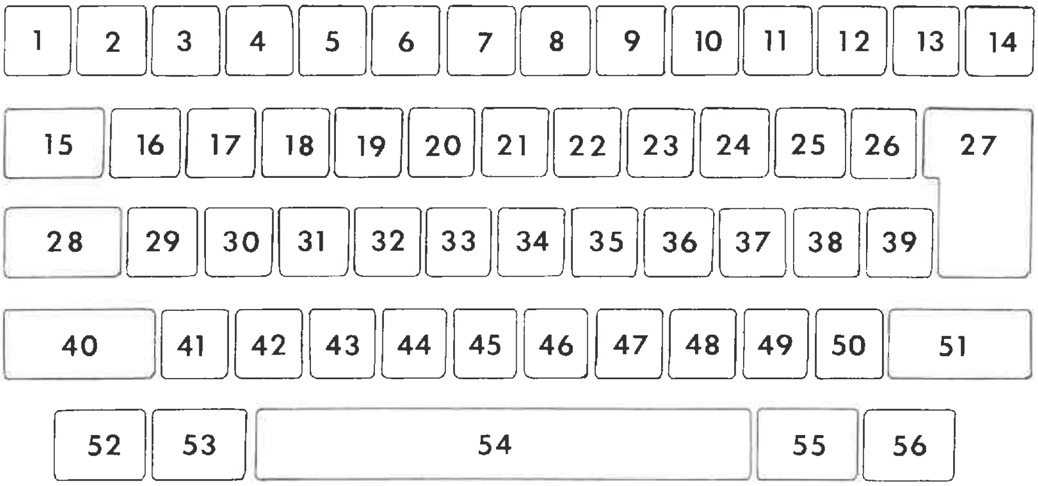

REF	PART NUMBER	ITEM
1	758300	TAB S/C
2	758301	1
3	758302	2
4	758303	3
4	758384	3/POUND SYMBOL UK, AU
5	758304	4
6	758305	5
7	758306	6
8	758307	7
9	758308	8
10	758309	9
11	758310	0
12	758311	_/-
13	758312	+/=
14	758313	BACKSPACE
15	758314	TAB
16	758315	Q
16	758385	Q/UMLAUT UK, AU
17	758316	W
17	758386	W/CIRCUMFLEX UK, AU
18	758317	E
18	758387	E/ij UK, AU
19	758318	R
19	758388	R/GUILDER UK, AU
20	758319	T
20	758389	T/GRAVE ACCENT UK, AU
21	758320	Y
21	758390	Y/ACUTE ACCENT UK, AU
22	758321	U
23	758322	I
24	758323	O
25	758324	P
26	758325	1/4 OVER 1/2
26	758391	1/3 / 1/2 / 1/4 UK, AU
27	758326	RETURN/RELOCATE
28	758327	LOCK
29	758328	A
30	758329	S
31	758246	D/DICTIONARY
32	758247	F/FIND
33	758332	G
34	758333	H
35	758334	J
36	758335	K
37	758336	L
38	758337	:/;
39	758338	"/'
39	758392	3/4 / '/" UK, AU
40	758339	SHIFT, LEFT
41	758340	Z
42	758341	X
43	758342	C
44	758343	V
45	758248	B/BOLD
46	758345	N
47	758346	M
48	758347	,/,
49	758348	./.
50	758349	? OVER /
51	758350	SHIFT, RIGHT
52	758351	CODE
53	758352	MARGIN L-R
54	758353	SPACEBAR/HALFSPACE
55	758354	WORDERASER
56	758355	CORRECT

TYPE "B" KEYBOARD KEYBUTTON REFERENCE CHART

KEYBOARD CODES:

US	-- UNITED STATES	1063 KEYBOARD
EC	-- ENGLISH CANADIAN	1063 KEYBOARD
FC	-- FRENCH CANADIAN	1132 KEYBOARD
SA	-- SPANISH AMERICAN	1492 KEYBOARD
UK	-- UNITED KINGDOM	5108 KEYBOARD
GER	-- GERMAN	340 KEYBOARD

COLOR CODE:

ALL PLATINUM

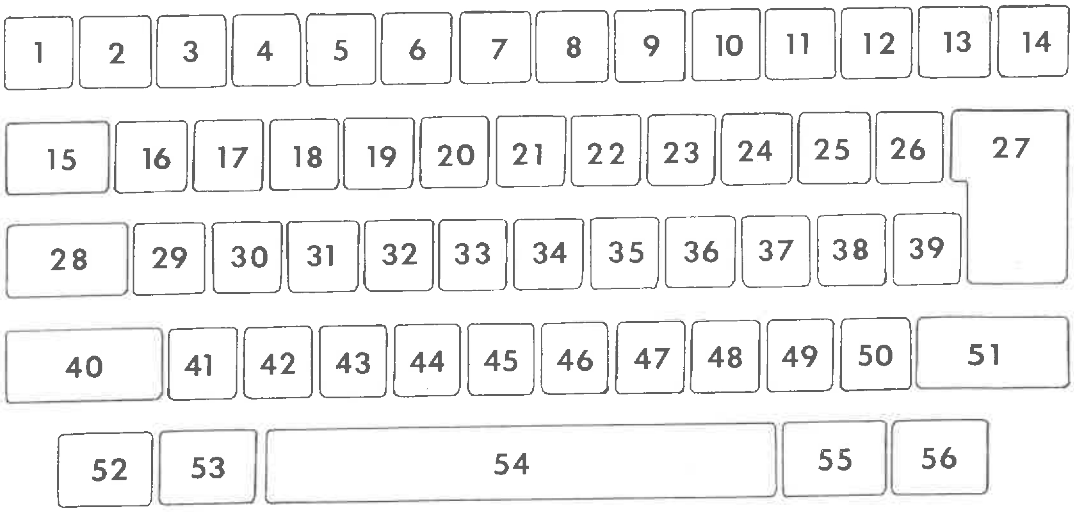

REF	PART NUMBER	ITEM
1	778400	TAB SET/CLEAR
2	778401	1 US,EC,SA,UK,GER
2	778456	1 FC
3	778402	2 US,EC,UK
3	778457	2 FC,SA,GER
4	778403	3 US,EC,SA
4	778458	3 FC
4	778484	3 UK
4	778493	3 GER
5	778404	4
6	778405	5
7	778406	6 US,EC,UK
7	778459	6 FC,SA
7	778494	6 GER
8	778407	7 US,EC,FC,SA,UK
8	778495	7 GER
9	778408	8 US,EC,UK
9	778460	8 FC,SA
9	778496	8 GER
10	778409	9 US,EC,FC,SA,UK
10	778497	9 GER
11	778410	0 US,EC,FC,SA,UK
11	778498	0 GER
12	778411	_/- US,EC,FC,SA,UK
12	778499	?/ss GER
13	778412	+/= US,EC,FC,SA,UK
13	778500	GRAVE/ACUTE GER
14	778413	BACKSPACE
15	778414	TAB
16	778415	Q US,EC

REF	PART NUMBER	ITEM
16	778461	Q FC
16	778472	Q SA
16	778485	Q UK
16	778501	Q GER
17	778416	W US,EC
17	778462	W FC
17	778486	W UK
17	778473	W SA
17	778502	W GER
18	778417	E US,EC
18	778463	E FC
18	778474	E SA
18	778487	E UK
18	778503	E GER
19	778418	R US,EC
19	778464	R FC
19	778475	R SA
19	778488	R UK
19	778504	R GER
20	778419	T US,EC
20	778465	T FC
20	778476	T SA
20	778489	T UK
20	778505	T GER
21	778420	Y US,EC
21	778466	Y FC
21	778477	Y SA
21	778490	Y UK
21	778506	Z GER
22	778421	U US,EC,UK

REF	PART NUMBER	ITEM
22	778467	U FC
22	778478	U SA
22	778507	U GER
23	778422	I US,EC,UK
23	778468	I FC,SA
23	778508	I GER
24	778423	O
25	778424	P US,EC,FC,SA,UK
25	778509	P GER
26	778425	1/4 OVER 1/2 US,EC,FC
26	778479	UMLAUT/ACUTE/DIAGONAL SA
26	778491	ONE QUARTER/ONE HALF/ ONE THIRD UK
26	778510	U GER
27	778426	RETURN/RELOCATE
28	778427	LOCK
29	778428	A
30	778429	S
31	778430	D
31	778573	D/DICTIONARY
32	778431	F
32	778574	F/FIND
33	778432	G
34	778433	H
35	778434	J
36	778435	K
37	778436	L
38	778437	:/; US,EC,FC,UK
38	778480	N TILDE SA
38	778511	O UMLAUT GER

TYPE "B" KEYBOARD
KEYBUTTON
REFERENCE
CHART

KEYBOARD CODES:

US	--	UNITED STATES	1063 KEYBOARD
EC	--	ENGLISH CANADIAN	1063 KEYBOARD
FC	--	FRENCH CANADIAN	1132 KEYBOARD
SA	--	SPANISH AMERICAN	1492 KEYBOARD
UK	--	UNITED KINGDOM	5108 KEYBOARD
GER	--	GERMAN	340 KEYBOARD

COLOR CODE:

ALL PLATINUM

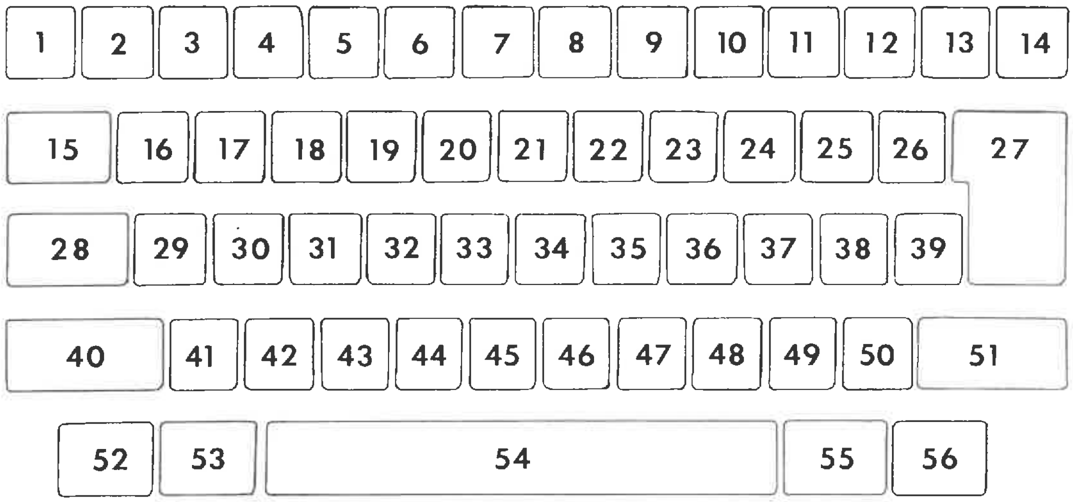

REF	PART NUMBER	ITEM
39	778438	QUOTE/APOSTROPHE/ PARAGRAPH US,EC
39	778469	CIRCUMFLEX/GRAVE/ PARAGRAPH FC
39	778481	:/;/INVERTED ! SA
39	778492	"/APOSTROPHE/ THREE QUARTERS UK
39	778512	A UMLAUT GER
40	778439	SHIFT (LEFT)
41	778440	Z US,EC,FC,SA,UK
41	778513	Y GER
42	778441	X
43	778442	C
44	778443	V
45	778444	B
45	778575	B/BOLD
46	778445	N
47	778446	M
48	778447	,/, US,EC,UK
48	778470	?/, FC
48	778482	DEGREE/, SA
48	778514	;/, GER
49	778448	./. US,EC,FC,SA,UK
49	778515	:/. GER
50	778449	?/DIAGONAL US,EC,UK
50	778471	c CEDILLA/e ACCUTE FC
50	778483	?/INVERTED ? SA
50	778516	_/- GER
51	778450	SHIFT (RIGHT)
52	778451	CODE
53	778452	MARGIN L/R
54	778453	SPACEBAR/HALFSPACE
55	778454	WORDERASER
56	778455	CORRECT

CARRIER MOLDING, RAILS, & FRAMES

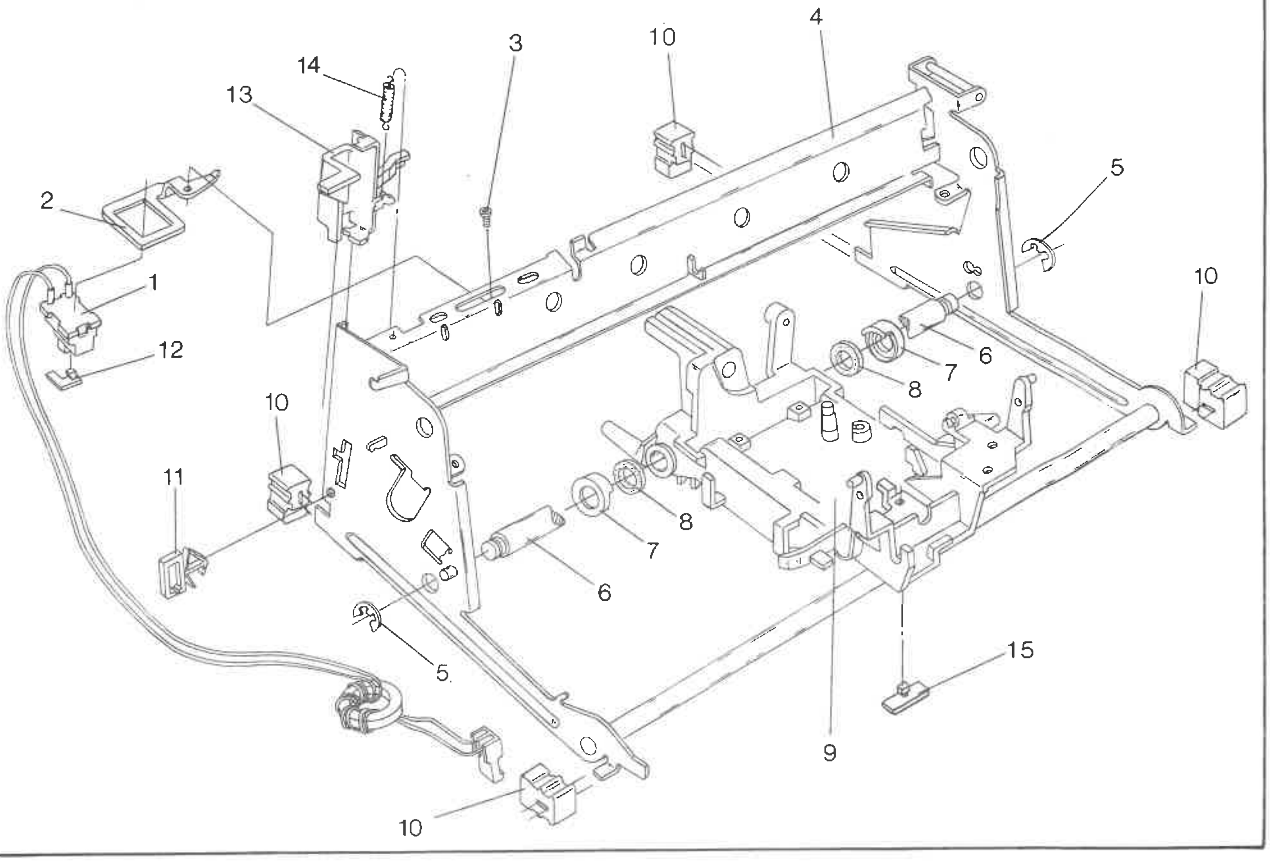

REF	PART NUMBER	PART NAME	QTY
1	771603	Left End Switch Assembly (w/Toriod)	1
2	751812	Switch Mount Bracket	1
3	748366	Screw, Pan-Torx	1
4	771267	Frame Assembly Complete	1
5	105100	Retaining Ring	2
6	770265	Rear Carrier Shaft	1
7	740257	Wiper Retainer	2
8	740084	Wiper	2
9	771950	Molded Carrier (w/Ref 15)	1
10	770435	Foot	4
11	717087	Cable Clamp	1
12	771270	Switch Cap	1
13	771272	Actuator	1
14	771271	Spring	1
15	780411	Slider	1

CARRIER DRIVE

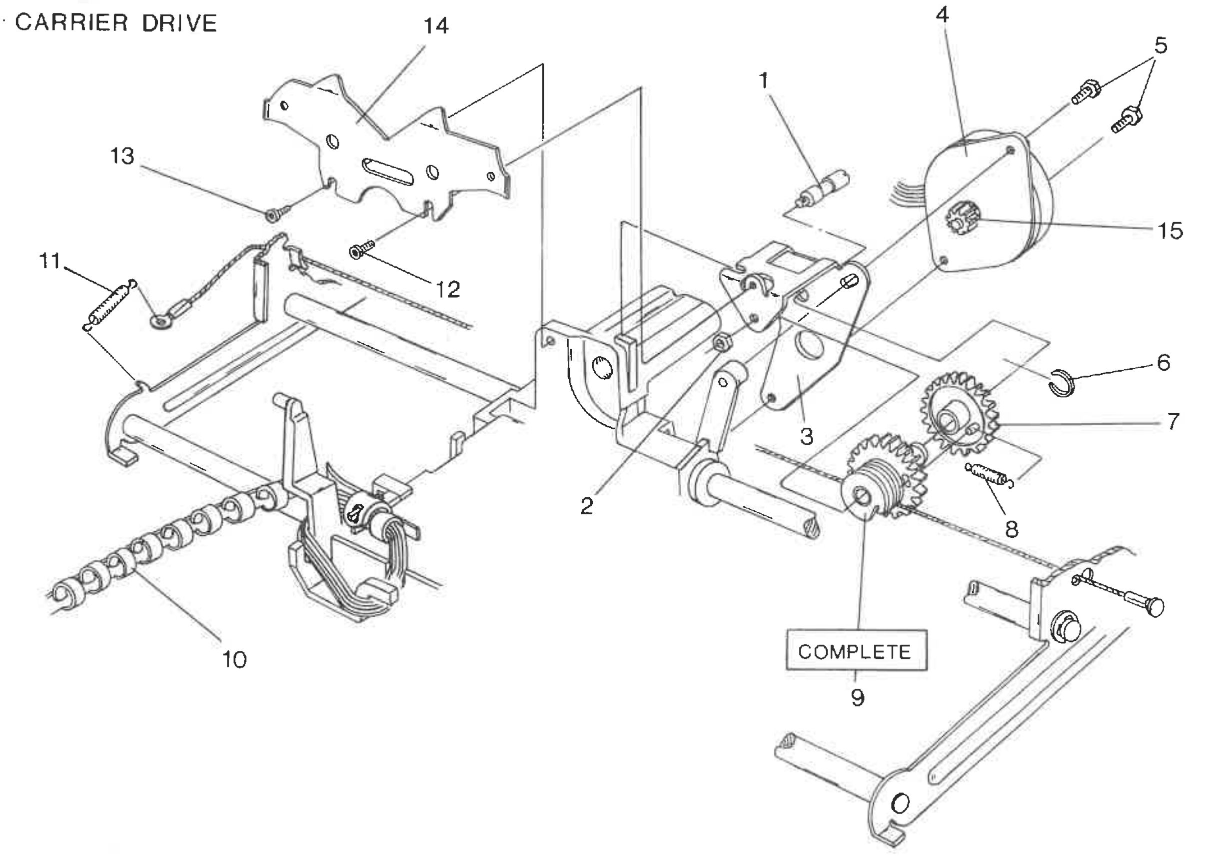

REF	PART NUMBER	PART NAME	QTY
1	747082	Capstan Pivot Screw	1
2	100200	Capstan Nut	1
3	751144	Capstan Bracket	1
4	770170	Carrier Motor Assembly	1
5	747258	Carrier Motor Screw	2
6	741374	Retaining Ring	1
7	743088	Carrier Drive Gear	1
8	743290	Capstan Scissor Spring	1
9	770319	Gear/Cable Assembly	1
10	770317	Wire Binder Retainer	1
11	770430	Carrier Cable Spring	1
12	748366	Pan Torx Screw	1
13	770672	Self Tap Torx Screw	1
14	771911	Line Indicator	1
15	364646	Carrier Motor Gear	1

ELEMENT DRIVE

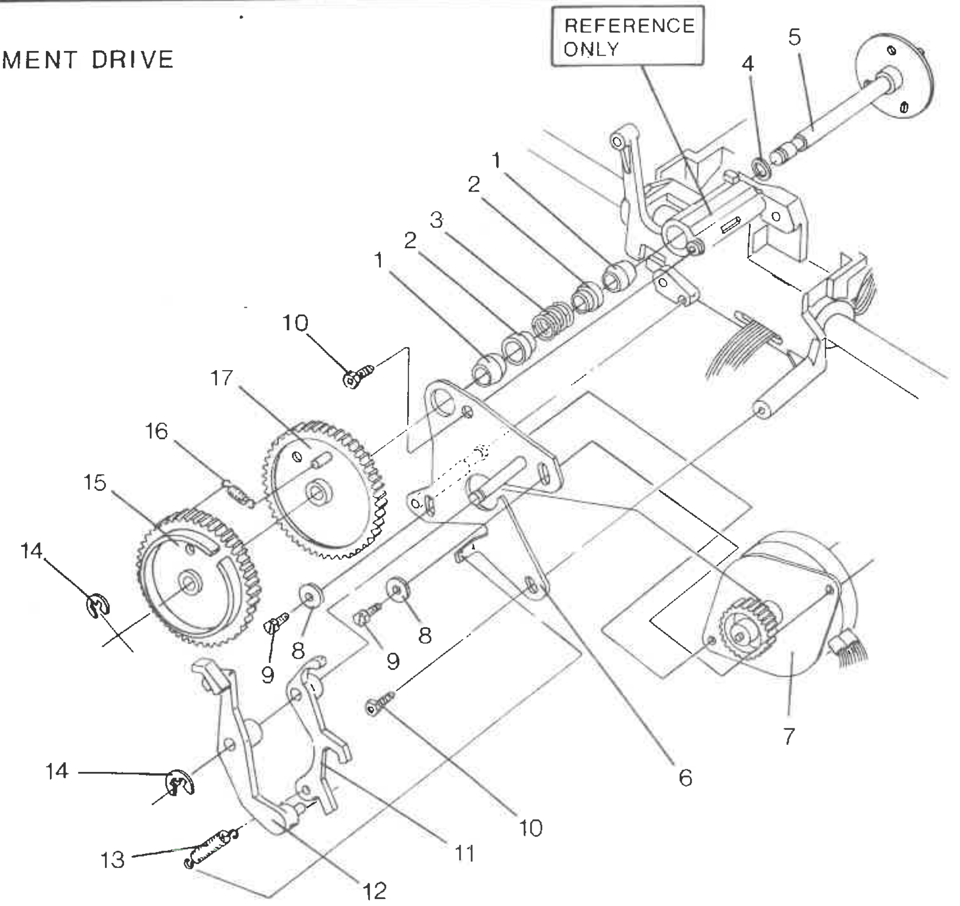

REF	PART NUMBER	PART NAME	QTY
1	740143	Element Shaft Bearing	2
2	752734	Element Shaft Bushing	2
3	745897	Element Shaft Spring	1
4	752735	Thrust Washer	1
5	740004	Element Shaft	1
6	749961	Element Motor Plate	1
7	770175	Element Motor Assembly	1
8	105090	Flat Washer	2
9	770297	Torx/Hex Head Screw	2
10	747258	Self Tap Torx Screw	2
11	749967	Element Home Actuator	1
12	751817	Element Home Latch	1
13	770685	Element Latch Spring	1
14	467980	Retaining Ring	2
15	749965	Element Gear	1
16	771260	Element Gear Spring	1
17	745321	Element Shaft Gear	1

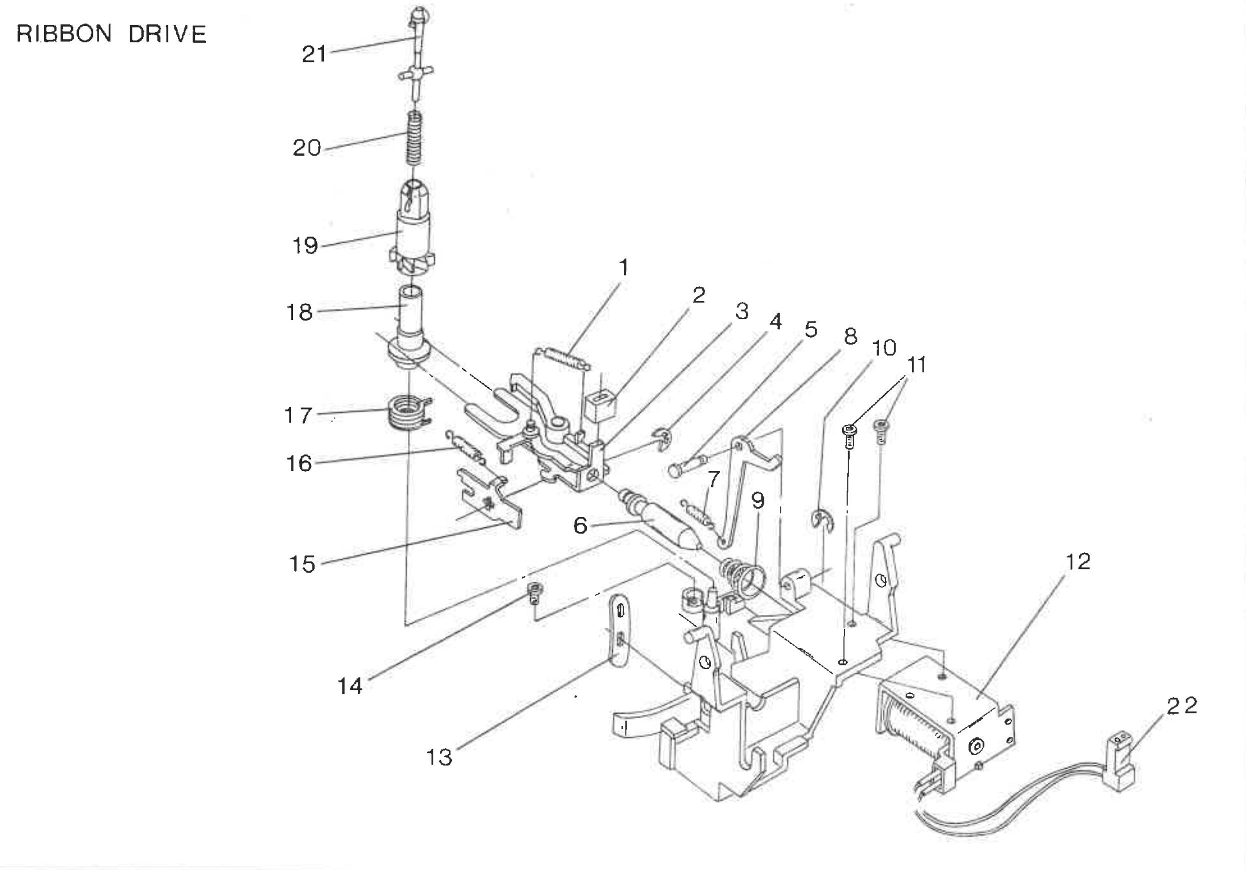

REF	PART NUMBER	PART NAME	QTY
1	740111	Ribbon Feed Spring	1
2	781725	Ribbon Feed Tubing	1
3	770290	Ribbon Feed Assembly	1
4	467980	Retaining Ring	1
5	770295	Correction Stud	1
6	771411	Ribbon Feed Plunger	1
7	428090	Correction Lift Spring	1
8	770294	Correction Lift Bellcrank	1
9	770277	Plunger Return Spring	1
10	102271	Retaining Ring	1
11	751055	Torx Screw	2
12	781949	Ribbon Drive Solenoid	1
13	770298	Wire Strap	1
14	747258	Torx Screw	1
15	770285	Black Feed Pawl Latch	1
16	771464	Black Latch Spring	1
17	770833	Anti-Backup Feed Spring	1
18	770161	Ribbon Feed Shaft	1
19	770164	Ribbon Drive Ratchet Hub	1
20	749841	Ribbon Driver Spring	1
21	770292	Ribbon Driver	1
22	751057	MTA Connector, 2 Pin	1

RIBBON CASSETTE & CORRECTION CASSETTE MECHANISM

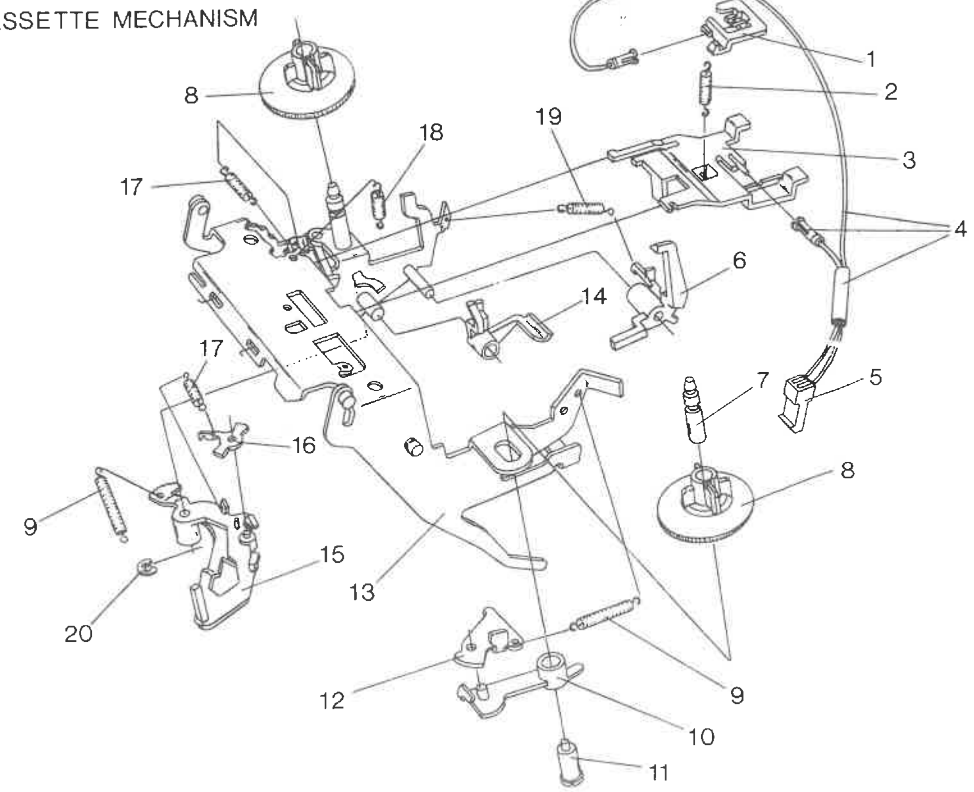

REF	PART NUMBER	PART NAME	QTY	REF	PART NUMBER	PART NAME	QTY
1	771796	Upper Contact Switch Holder	1	11	771839	Shoulder Screw	1
2	133250	Spring	1	12	771810	Tension Pawl	1
3	771797	Lower Contact Switch Holder	1	13	782113	Correction Bail Assembly	1
4	771847	Cassette Switch Wire Assembly	1	14	771809	Correction Ribbon Feed Arm	1
5	751057	MTA Connector, 2 Pin	1	15	771826	Correction Ribbon Actuator	1
6	772111	Cassette Latch	1	16	771807	Correction Ribbon Feed Pawl	1
7	771838	R.H. Correction Spool Stud	1	17	428090	Spring	2
8	771818	Ribbon Hub Ratchet	2	18	770686	Spring	1
9	771917	Spring	2	19	771843	Spring	1
10	771812	Tension Carrier	1	20	771912	E-Ring	1

HAMMER

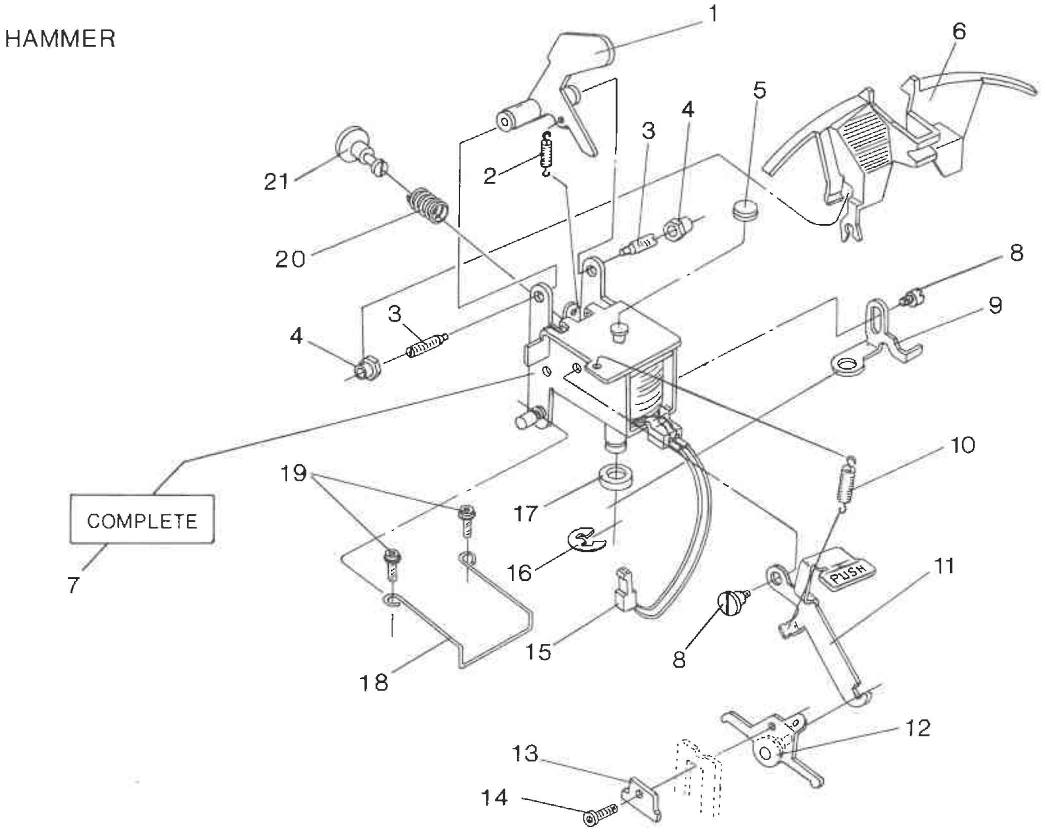

REF	PART NUMBER	PART NAME	QTY	REF	PART NUMBER	PART NAME	QTY
1	752637	Hammer	1	12	770432	Hammer Plate Assembly	1
2	771795	Hammer Spring	1	13	770280	Hammer Adjustment Washer	1
3	771794	Pivot Screw	2	14	770297	Hex Torx Screw	1
4	770296	Pivot Nut	2	15	751057	MTA Connector 2 Pin	1
5	772020	Plunger Cap	1	16	771463	E-Ring	1
6	771836	Ribbon Guide	1	17	748562	O-Ring	1
7	771827	Hammer Solenoid Complete	1	18	749789	Hammer Solenoid Retainer	1
8	741510	Screw	2	19	747258	Self Tap Torx Screw	2
9	770162	Latch Trip	1	20	770924	Pusher Spring (Red)	1
10	771419	Hammer Latch Spring	1	21	749735	Printwheel Pusher	1
11	771829	Hammer Latch Lever	1				

PAPER FEED
FOUR ROLLER PAPER TABLE

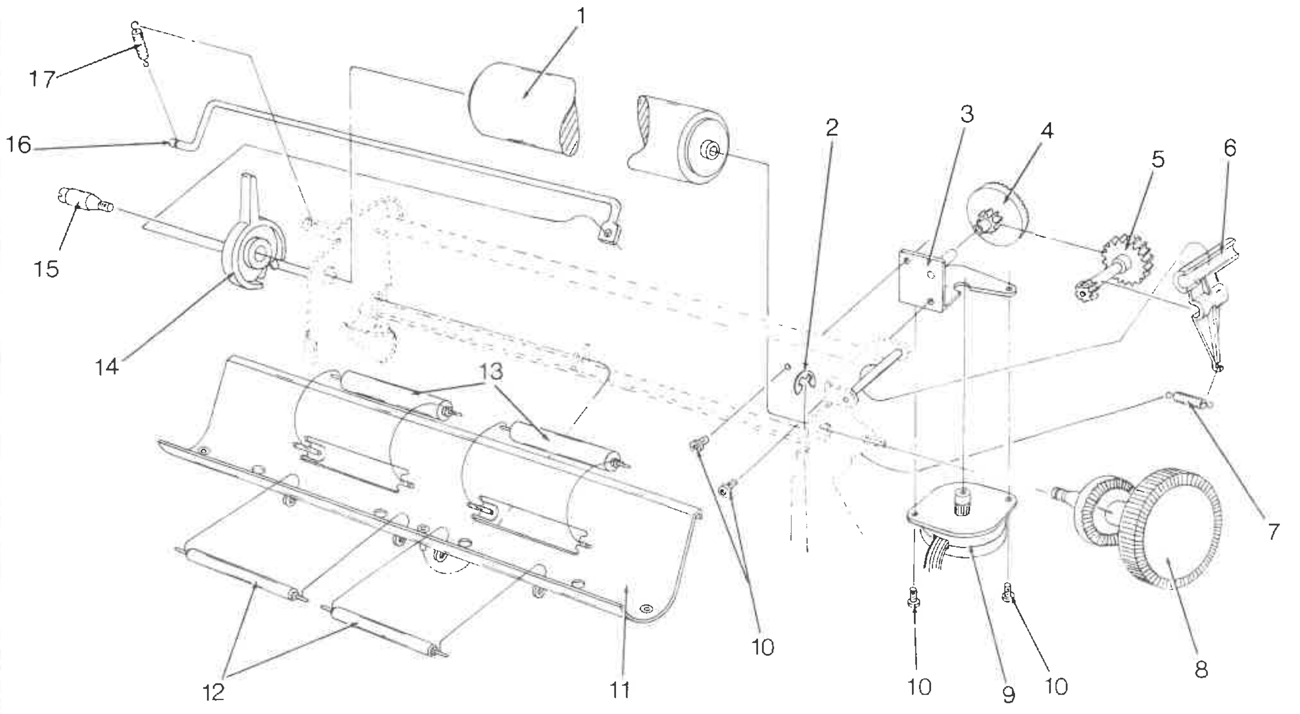

REF	PART NUMBER	PART NAME	QTY
1	752559	Platen Assembly	1
2	771930	Retaining Ring	1
3	770191	Linespace Bracket	1
4	770165	Pinion Face Gear	1
5	750056	Linespace Pinion	1
6	780000	Linespace Pinion Pivot	1
7	770199	Linespace Pinion Spring	1
8	771932	Platen Knob, Gray, (5ACC, 5ACD, 5AKC, 5AGA)	1
8	771934	Platen Knob, Platinum, (5AEC, 5APC, 5AWC, 5AED, 5AWD, 5APD)	1
9	770180	Linespace Motor Assembly	1
10	752247	Pan Torx Screw	4
11	748050	Paper Table (Nickel)	1
12	751222	Paper Feed Shaft, Front	2
13	751223	Paper Feed Shaft, Rear	2
14	750077	Paper Release Lever	1
15	750075	Left Platen Shaft	1
16	748995	Paper Release Shaft	1
17	751437	Paper Release Spring	1

CONTROL PC BOARD
5AEC, 5ACC, 5AWC, 5AKC, 5APC, 5AGA

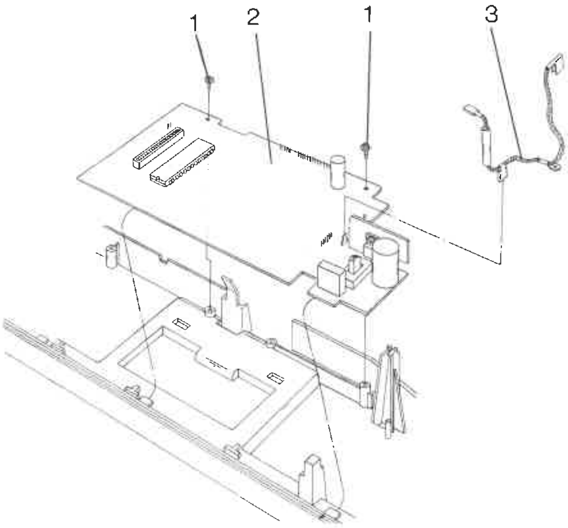

CONTROL PC BOARD
5AED, 5ACD, 5AWD, 5APD

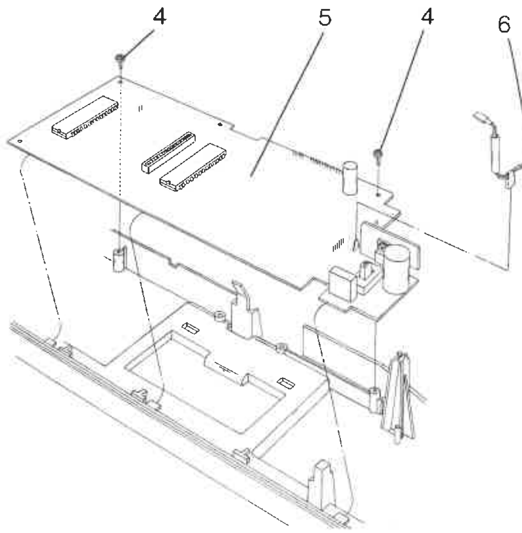

REF	PART NUMBER	PART NAME	QTY
		FOR MODELS 5AEC/5ACC/5AWC/5AKC/5APC/5AGA	
1	747258	Screw	2
2	772800	Control PC Board	1
3	772632	Ground Cable Assembly	1

REF	PART NUMBER	PART NAME	QTY
		FOR MODELS 5AED/5ACD/5AWD/5APD	
4	747258	Screw	2
5	772091	Control PC Board	1
6	772631	Ground Cable Assembly	1
		FOR INTERNATIONAL MODELS ONLY	
5	772092	Control PC Board UK, AUST	1
5	772093	Control PC Board FR/CANADIAN	1
5	772095	Control PC Board SPAN/AMER	1

TRANSFORMER , DOMESTIC

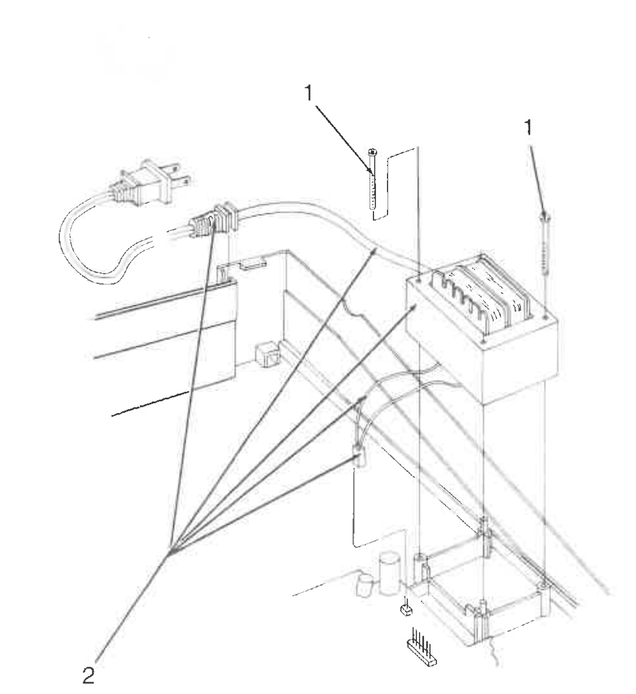

TRANSFORMER , INTERNATIONAL

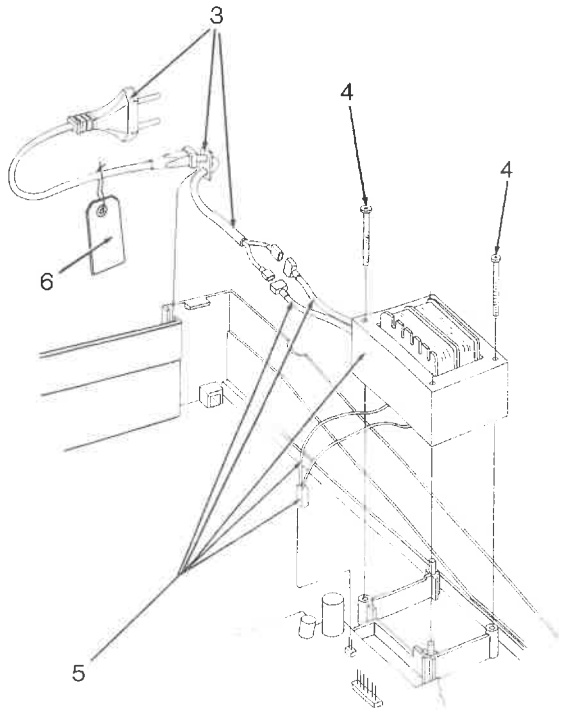

REF	PART NUMBER	PART NAME	QTY
		FOR USA AND CANADA MODELS ONLY	
1	770434	Transformer Screw	2
2	770821	Transformer Assembly, (includes Line Cord, 120V/60Hz)	1

REF	PART NUMBER	PART NAME	QTY
		FOR INTERNATIONAL MODELS ONLY	
3	771695	Line Cord Assembly, SINGAPORE, NETHERLAND, FR/BELGIUM	1
3	771696	Line Cord Assembly, AUSTRALIA	1
4	770434	Transformer Screw	2
5	771148*	Transformer Assembly, 220V/50Hz NETHERLANDS, FR/BELGIUM	1
5	771595*	Transformer Assembly, 240V/50Hz AUSTRALIA, SINGAPORE	1
5	771597*	Transformer Assembly, 240V/50Hz, UK (Attached Line Cord)	1
6	771913	Power Cord Tag, UK	1

* INTERNATIONAL TRANSFORMERS AVAILABLE FOR SALE ONLY TO INT'L DISTRIBUTORS

COMPONENT DIAGRAM

CONTROL PC BOARD

MODELS 5AEC, 5ACC
5AWC, 5AKC
5APC, 5AGA

P/N 772800

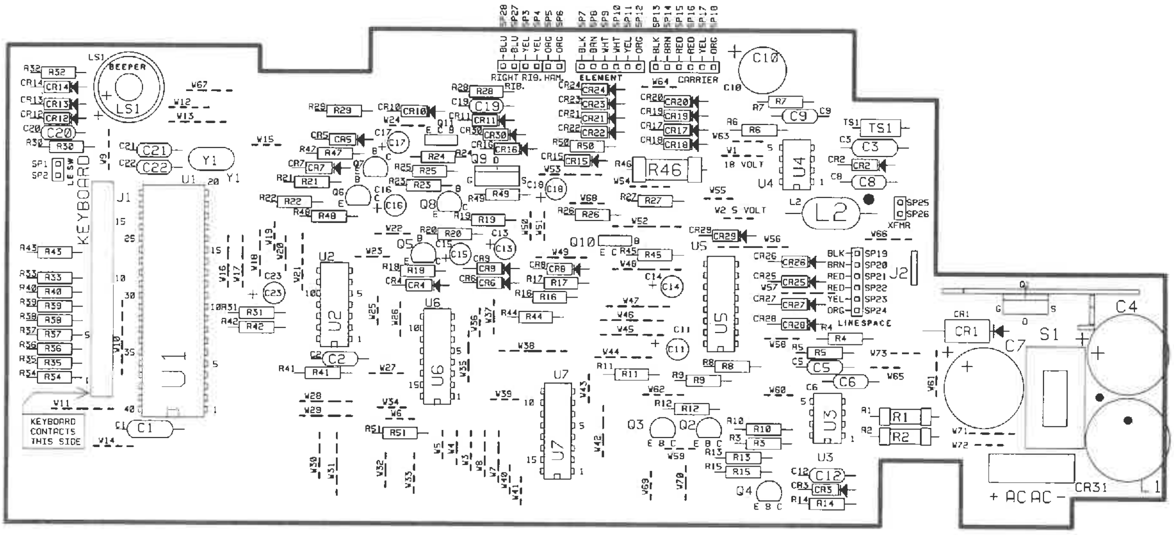

COMPONENT	PART NUMBER	DESCRIPTION
C1, C2, C8, C19, C20	700341	CAPACITOR, .01 uF/50V, AXIAL, CERAMIC
C3	741573	CAPACITOR, .1 uF/100V, AXIAL, CERAMIC
C4	770215	CAPACITOR, 2200 uF/35V, RAD., ELEC.
C5	741572	CAPACITOR, 1800pF/50V, AXIAL, CERAMIC
C6	741575	CAPACITOR, 390pF/100V, AXIAL, CERAMIC
C7	770216	CAPACITOR, 3300 uF/25V, RAD., ELEC.
C9	741576	CAPACITOR, 270pF/100V, AXIAL, CERAMIC
C10	730033	CAPACITOR, 1000 uF/6.3V, RAD., ELEC.
C11, C14, C15, C18	770229	CAPACITOR, 1 uF/50V, RAD., ELEC.
C12	741565	CAPACITOR, .1 uF/50V, AXIAL, CERAMIC
C13, C17	736104	CAPACITOR, 47 uF/16V, RAD., ELEC.
C16	770228	CAPACITOR, 68 uF/6.3V, RAD., ELEC.
C21, C22	700365	CAPACITOR, 30pF/100V, AXIAL, CERAMIC
C23	736100	CAPACITOR, 10 uF/16V, RAD., ELEC.
CR1	760479	DIODE, 3 AMP, 50V, SR305
CR2	760421	DIODE, 1 AMP, SCHOTTKY, 1N5819
CR3-CR14	709100	DIODE, SILICON, SWITCHING, 1N914
CR15, CR16	722058	DIODE, RECTIFIER, FAST RECOVERY, 1N4933
CR29	746184	DIODE, RECTIFIER, 1 AMP, 100V, 1N4002
CR30	781740	DIODE, ZENER, 1.5 W, 5.1V, 1N5918A
CR31	734802	DIODE, BRIDGE RECTIFIER, 4 AMP, 50V
J1	770150	CONNECTOR, FLEX CABLE, .100 CTRS, 17 POS.
J2	752076	TERMINAL, DISCONNECT, .110 TAB
L1	781727	INDUCTOR, VERTICAL, 4 PIN, 160 uH, 6 AMP
L2	781901	INDUCTOR, AXIAL, 100 uH
LSI (BEEPER)	728783	AUDIO TRANSDUCER, 12V
Q1	760812	TRANSISTOR, P-CHANNEL, 50V, IRF9Z20
Q2, Q4-Q8	702518	TRANSISTOR, NPN, SWITCHING, TO-92, 2N3904
Q3	703714	TRANSISTOR, PNP, SWITCHING, TO-92, 2N3906
Q9	770302	TRANSISTOR, NPN, DARLINGTON, TO-220, 2N6045
Q10	740344	TRANSISTOR, PNP, DARLINGTON, TO-126, 2N6035
Q11	743086	TRANSISTOR, NPN, DARLINGTON, TO-126, 2N6039

COMPONENT DIAGRAM

CONTROL PC BOARD

MODELS 5AEC, 5ACC
5AWC, 5AKC
5APC, 5AGA

P/N 772800

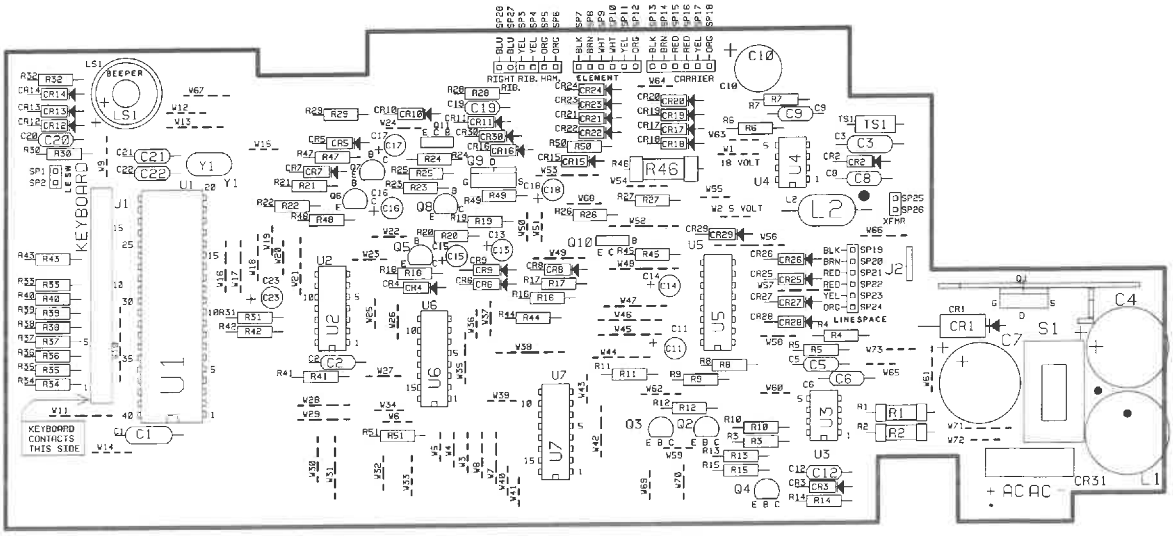

COMPONENT	PART NUMBER	DESCRIPTION
R1	760450	RESISTOR, 470 OHMS, 1 W, 5%
R2	760455	RESISTOR, 680 OHMS, 1 W, 5%
R3, R32	746938	RESISTOR, 390 OHMS, 1/4 W, 5%
R4	748289	RESISTOR, 137 K OHMS, 1/4 W, 1%
R5, R6	748290	RESISTOR, 10.2 K OHMS, 1/4 W, 1%
R7	748291	RESISTOR, 3.4 K OHMS, 1/4 W, 1%
R8, R14, R29, R31, R34-R40	701287	RESISTOR, 39 K OHMS, 1/4 W, 5%
R9, R19, R22, R24	701263	RESISTOR, 100 K OHMS, 1/4 W, 5%
R10, R26	748236	RESISTOR, 6.2 K OHMS, 1/4 W, 5%
R11	701262	RESISTOR, 51 K OHMS, 1/4 W, 5%
R12	748221	RESISTOR, 27 K OHMS, 1/4 W, 5%
R15, R20, R25, R41, R51	701268	RESISTOR, 10 K OHMS, 1/4 W, 5%
R13	701282	RESISTOR, 150 K OHMS, 1/4 W, 5%
R16	748231	RESISTOR, 270 K OHMS, 1/4 W, 5%
R17	701270	RESISTOR, 47 K OHMS, 1/4 W, 5%
R18, R21, R47	748235	RESISTOR, 62 K OHMS, 1/4 W, 5%
R23	748226	RESISTOR, 82 K OHMS, 1/4 W, 5%
R27	701267	RESISTOR, 2.7 K OHMS, 1/4 W, 5%
R28, R30, R33, R43, R48	701252	RESISTOR, 220 OHMS, 1/4 W, 5%
R42, R50	781720	RESISTOR, 11 OHMS, 1/4 W, 5%, WIRE WOUND
R44, R45, R49	701280	RESISTOR, 1.8 K OHMS, 1/4 W, 5%
R46	781501	RESISTOR, 220 OHMS, 2 W, 5%
S1	770822	SWITCH, SPST, PC MOUNT, SLIDE
SP1-SP28	748858	STAKE PIN, .025 SQUARE
U1	750664	IC, MICROPROCESSOR, 8052 AH
U2	724700	IC, HEX BUFFER, OPEN COLLECTOR, 7406
U3, U4	781723	IC, POWER SUPPLY CONTROLLER, MC34063
U5-U7	781722	IC, QUAD DRIVER, INVERTING, L-6220
W1, W2, W9-W73, CR17-CR28	705294	JUMPER WIRE
Y1	770304	CRYSTAL, RF QUARTZ, 12 MHz

COMPONENT DIAGRAM

CONTROL PC BOARD

MODELS 5AED, 5ACD
5AWD, 5APD

P/N 772091
772092
772093
772095

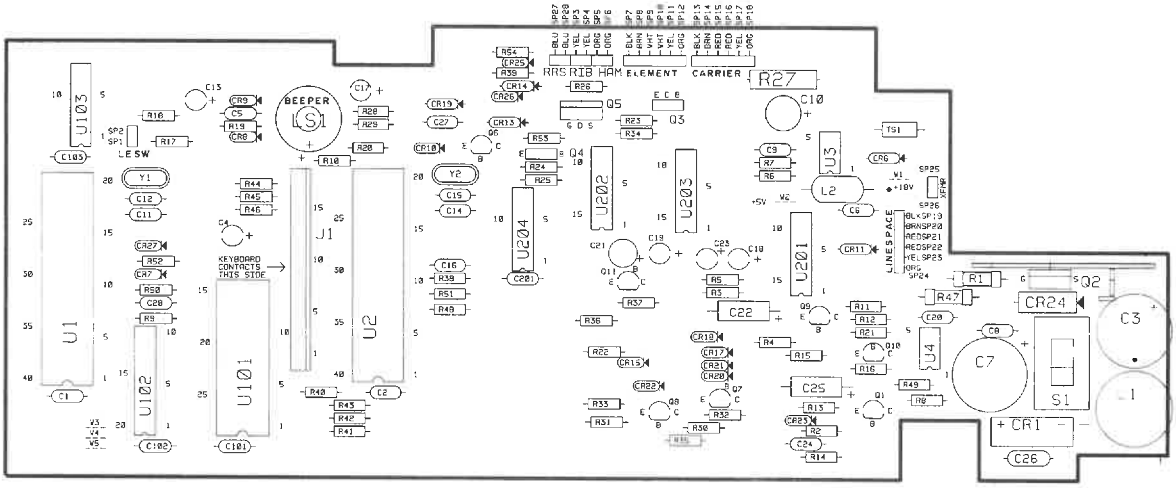

COMPONENT	PART NUMBER	DESCRIPTION
C1, C2, C26, C101, C102	700349	CAPACITOR, .1 uF/50V, AXIAL, CERAMIC
C3	770218	CAPACITOR, 2200 uF/50V, RAD., ELEC.
C4, C13	736100	CAPACITOR, 10 uF/16V, RAD., ELEC.
C5, C6, C27	700341	CAPACITOR, .01 uF/50V, AXIAL, CERAMIC
C7	770216	CAPACITOR, 3300 uF/25V, RAD., ELEC.
C8	741575	CAPACITOR, 390 pF/100V, AXIAL, CERAMIC
C9	741576	CAPACITOR, 270 pF/100V, AXIAL, CERAMIC
C10	730033	CAPACITOR, 1000 uF/6.3V, RAD., ELEC.
C11, C12, C14, C15	700365	CAPACITOR, 30 pF/100V, AXIAL, CERAMIC
C16, C24	741565	CAPACITOR, .1 uF/50V, AXIAL, CERAMIC
C18, C23	730014	CAPACITOR, 47 uF/16V, RAD., ELEC.
C17, C19	736112	CAPACITOR, 1 uF/50V, RAD., ELEC.
C20	741572	CAPACITOR, 1800 uF/100V, AXIAL, CERAMIC
C21	736111	CAPACITOR, 68 uF/6.3V, RAD., ELEC.
C22, C25	771482	CAPACITOR, 1 uF/50V, AXIAL, ELEC.
C28	741574	CAPACITOR, 56 pF/50V, AXIAL, CERAMIC
C103, C201	700366	CAPACITOR, .01 uF/50V, AXIAL, CERAMIC
CR1	734802	BRIDGE RECTIFIER, 4 AMP
CR11	746184	DIODE, 1 AMP, 100V, RECTIFIER, 1N4002
CR6	760421	DIODE, 1 AMP, SCHOTTKY, 1N5819
CR7-CR10, CR15, CR17, CR18, CR20-CR23, CR25-CR27	709100	DIODE, SILICON, SWITCHING, 1N914
CR13, CR14	722058	DIODE, 1 AMP, FAST RECOVERY, 1N4933
CR19	781740	DIODE, ZENER, 1.5 W/5.1V, 1N5918A
CR24	760479	DIODE, 3 AMP, SCHOTTKY, MRB350
J1	770150	CONNECTOR, .100, 17 POSITION FLEX CABLE
J2	740440	TERMINAL, DISCONNECT, .250 TAB
L1	781727	INDUCTOR, VERTICAL, 4 PIN, 160 uH, 6 AMP
L2	781901	INDUCTOR, AXIAL, 100 uH
LSI (BEEPER)	728783	AUDIO TRANSDUCER, 12V
Q1	703714	TRANSISTOR, PNP, SWITCHING, TO-92, 2N3906
Q2	760812	TRANSISTOR, P-CHANNEL, 50V, IRF9Z20
Q3	740344	TRANSISTOR, PNP, DARLINGTON, TO-126, 2N6035
Q4	743086	TRANSISTOR, NPN, DARLINGTON, TO-126, 2N6039
Q5	781726	TRANSISTOR, N-CHANNEL, 150V, MTP10N15
Q6-Q11	702518	TRANSISTOR, NPN, SWITCHING, TO-92, 2N3904

COMPONENT DIAGRAM

CONTROL PC BOARD

MODELS 5AED, 5ACD
5AWD, 5APD

P/N 772091
772092
772093
772095

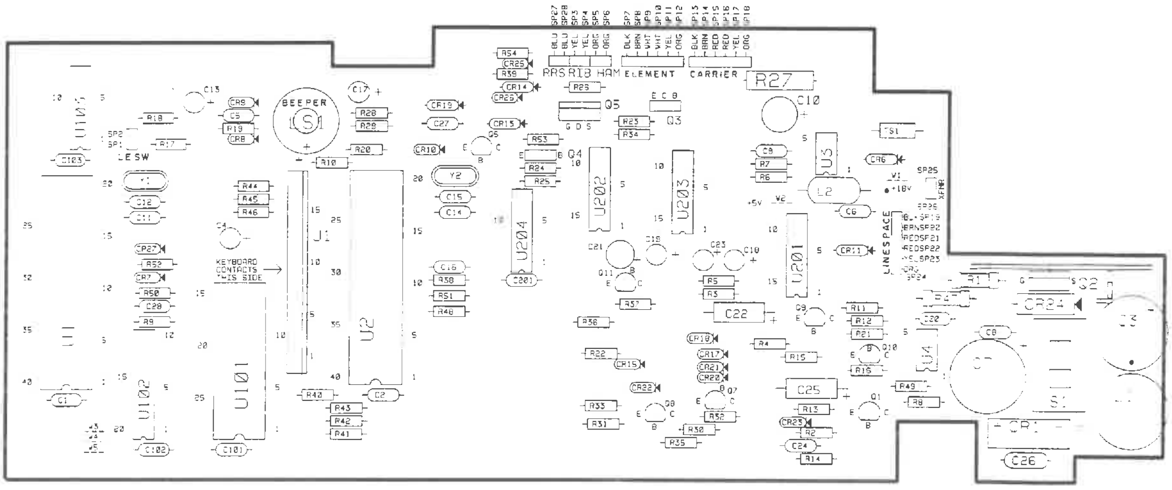

COMPONENT	PART NUMBER	DESCRIPTION
R1	760450	RESISTOR, 470 OHMS, 1 W, 5%
R2, R14, R19, R40-R46, R54	701287	RESISTOR, 39 K OHMS, 1/4 W, 5%
R3	701270	RESISTOR, 47 K OHMS, 1/4 W, 5%
R4, R18, R32, R35	701268	RESISTOR, 10 K OHMS, 1/4 W, 5%
R5	748231	RESISTOR, 270 K OHMS, 1/4 W, 5%
R6, R12	748290	RESISTOR, 10.2 K OHMS, 1/4 W, 1%
R7	748291	RESISTOR, 3.4 K OHMS, 1/4 W, 1%
R8, R20	746938	RESISTOR, 390 OHMS, 1/4 W, 5%
R9	701271	RESISTOR, 470 OHMS, 1/4 W, 5%
R10, R17, R25, R39, R48, R50	701252	RESISTOR, 220 OHMS, 1/4 W, 5%
R11	701282	RESISTOR, 150 K OHMS, 1/4 W, 5%
R13	748221	RESISTOR, 27 K OHMS, 1/4 W, 5%
R15	701262	RESISTOR, 51 K OHMS, 1/4 W, 5%
R16, R31, R34, R36	701263	RESISTOR, 100 K OHMS, 1/4 W, 5%
R21	748289	RESISTOR, 137 K OHMS, 1/4 W, 1%
R22, R30, R33	748235	RESISTOR, 62 K OHMS, 1/4 W, 5%
R23, R24, R38, R53	701280	RESISTOR, 1.8 K OHMS, 1/4 W, 5%
R26, R51, R52	781720	RESISTOR, 11 OHMS, 1/4 W, 5%, WIRE WOUND
R27	781501	RESISTOR, 220 OHMS, 2 W, 5%
R28, R49	748236	RESISTOR, 6.2 K OHMS, 1/4 W, 5%
R29	701267	RESISTOR, 2.7 K OHMS, 1/4 W, 5%
R37	748226	RESISTOR, 82 K OHMS, 1/4 W, 5%
R47	760455	RESISTOR, 680 OHMS, 1 W, 5%
S1	770822	SWITCH, SPDT, PC MOUNT, SLIDE
SP1-SP28	748858	STAKE PIN, .025" SQUARE, .410" LONG

COMPONENT DIAGRAM

CONTROL PC BOARD

MODELS 5AED, 5ACD
5AWD, 5APD

P/N 772091
772092
772093
772095

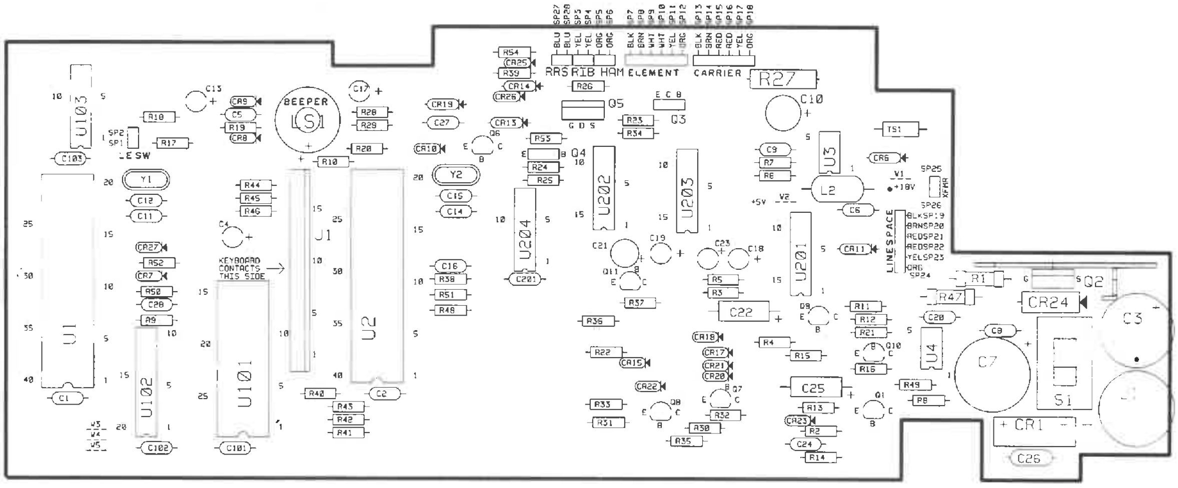

COMPONENT	PART NUMBER	DESCRIPTION
TS1	771473	TRANSORB, 47V, P6KE47C
U1	752400	IC, MICROPROCESSOR, 8032 AH, MASTER
U2	750676	IC, MICROPROCESSOR, 8052 AH, SLAVE
U3, U4	781723	IC, POWER SUPPLY CONTROLLER, MC 34063
U101	750672	IC, ROM USA AND CANADA
U102	709684	IC, TTL-LS, OCTAL D-TYPE, TRANSPARENT LATCH, 74LS373
U103	709683	IC, TTL-LS, 4 AND GATES, 74LS08
U201-U203	781722	IC, QUAD DRIVER, INVERTING L-6220
U204	724700	IC, HEX BUFFER, OPEN COLLECTOR, 7406
W1, W2	705294	JUMPER WIRE
Y1, Y2	770304	CRYSTAL, RF QUARTZ, 12 MHz
FOR INTERNATIONAL MODELS ONLY		
U101	750673	IC, ROM UNITED KINGDOM
U101	750674	IC, ROM FRENCH/CANADIAN
U101	750675	IC, ROM SPANISH/AMERICAN

PART NUMBER	PAGE NUMBER	PART NUMBER	PAGE NUMBER	PART NUMBER	PAGE NUMBER	PART NUMBER	PAGE NUMBER
100200	10	728783	18	746184	18	751055	12
102271	12	728783	20	746184	20	751057	12
105090	11	729572	2	746938	19	751057	13
105100	9	729572	3	746938	21	751057	14
133250	13	730014	20	747082	10	751144	10
364646	10	730033	18	747258	2	751222	15
428090	12	730033	20	747258	10	751223	15
428090	13	734802	18	747258	11	751437	15
467980	11	734802	20	747258	12	751812	9
467980	12	736100	18	747258	14	751817	11
700341	18	736100	20	747258	16	752076	18
700341	20	736104	18	747258	16	752247	15
700349	20	736111	20	748050	15	752400	22
700365	18	736112	20	748221	19	752559	15
700365	20	740004	11	748221	21	752637	14
700366	20	740084	9	748226	19	752734	11
701252	19	740111	12	748226	21	752735	11
701252	21	740143	11	748231	19	758246	6
701262	19	740257	9	748231	21	758247	6
701262	21	740344	18	748235	19	758248	6
701263	19	740344	20	748235	21	758300	6
701263	21	740440	20	748236	19	758301	6
701267	19	741374	10	748236	21	758302	6
701267	21	741510	14	748289	19	758303	6
701268	19	741565	18	748289	21	758304	6
701268	21	741565	20	748290	19	758305	6
701270	19	741572	18	748290	21	758306	6
701270	21	741572	20	748291	19	758307	6
701271	21	741573	18	748291	21	758308	6
701280	19	741574	20	748366	9	758309	6
701280	21	741575	18	748366	10	758310	6
701282	19	741575	20	748562	14	758311	6
701282	21	741576	18	748858	19	758312	6
701287	19	741576	20	748858	21	758313	6
701287	21	742968	4	748995	15	758314	6
702518	18	742970	4	749735	14	758315	6
702518	20	742971	4	749789	14	758316	6
703714	18	742972	4	749841	12	758317	6
703714	20	742973	4	749961	11	758318	6
705294	19	742974	4	749965	11	758319	6
705294	22	742975	4	749967	11	758320	6
709100	18	742976	4	750056	15	758321	6
709100	20	742977	4	750075	15	758322	6
709683	22	742978	4	750077	15	758323	6
709684	22	743086	18	750664	19	758324	6
717087	9	743086	20	750672	22	758325	6
722058	18	743088	10	750673	22	758326	6
722058	20	743290	10	750674	22	758327	6
724700	19	745321	11	750675	22	758328	6
724700	22	745897	11	750676	22	758329	6

PART NUMBER	PAGE NUMBER	PART NUMBER	PAGE NUMBER	PART NUMBER	PAGE NUMBER	PART NUMBER	PAGE NUMBER
758332	6	770164	12	770873	2	771950	9
758333	6	770165	15	770874	2	772020	14
758334	6	770170	10	770875	2	772030	2
758335	6	770175	11	770877	2	772031	2
758336	6	770180	15	770924	14	772032	3
758337	6	770191	15	771148	17	772033	3
758338	6	770199	15	771260	11	772040	2
758339	6	770215	18	771267	9	772041	2
758340	6	770216	18	771270	9	772042	3
758341	6	770216	20	771271	9	772043	3
758342	6	770218	20	771272	9	772044	2
758343	6	770228	18	771411	12	772045	2
758345	6	770229	18	771419	14	772046	2
758346	6	770265	9	771425	3	772047	3
758347	6	770277	12	771426	2	772048	3
758348	6	770280	14	771463	14	772052	2
758349	6	770285	12	771464	12	772091	16
758350	6	770290	12	771473	22	772092	16
758351	6	770292	12	771482	20	772093	16
758352	6	770294	12	771595	17	772095	16
758353	6	770295	12	771603	9	772111	13
758354	6	770296	14	771620	4	772631	4
758355	6	770297	11	771695	17	772631	5
758384	6	770297	14	771696	17	772631	16
758385	6	770298	12	771697	17	772632	5
758386	6	770302	18	771794	14	772632	16
758387	6	770304	19	771795	14	772681	2
758388	6	770304	22	771796	13	772681	3
758389	6	770317	10	771797	13	772682	2
758390	6	770319	10	771807	13	772682	3
758391	6	770371	4	771809	13	772700	2
758392	6	770430	10	771810	13	772703	2
760421	18	770432	14	771812	13	772800	16
760421	20	770434	17	771818	13	772890	3
760450	19	770435	9	771826	13	772891	2
760450	21	770672	10	771827	14	778280	5
760455	19	770680	2	771829	14	778281	5
760455	21	770683	2	771836	14	778282	5
760479	18	770685	11	771838	13	778316	5
760479	20	770686	13	771839	13	778340	5
760812	18	770756	2	771843	13	778347	5
760812	20	770757	2	771847	13	778349	5
770014	2	770821	17	771910	2	778350	5
770014	3	770822	19	771911	10	778351	5
770015	2	770822	21	771912	13	778352	5
770015	3	770829	2	771913	17	778353	5
770150	18	770833	12	771917	13	778356	5
770150	20	770870	3	771930	15	778357	5
770161	12	770871	3	771932	15	778358	5
770162	14	770872	3	771934	15	778359	5

PART NUMBER	PAGE NUMBER
778362	5
778363	5
778400	7
778401	7
778402	7
778403	7
778404	7
778405	7
778406	7
778407	7
778408	7
778409	7
778410	7
778411	7
778412	7
778413	7
778414	7
778415	7
778416	7
778417	7
778418	7
778419	7
778420	7
778421	7
778422	7
778423	7
778424	7
778425	7
778426	7
778427	7
778428	7
778429	7
778430	7
778431	7
778432	7
778433	7
778434	7
778435	7
778436	7
778437	7
778438	8
778439	8
778440	8
778441	8
778442	8
778443	8
778444	8
778445	8
778446	8
778447	8
778448	8
778449	8
778450	8
778451	8
778452	8
778453	8
778454	8
778455	8
778456	7
778457	7
778458	7
778459	7
778460	7
778461	7
778462	7
778463	7
778464	7
778465	7
778466	7
778467	7
778468	7
778469	8
778470	8
778471	8
778472	7
778473	7
778474	7
778475	7
778476	7
778477	7
778478	7
778479	7
778480	7
778481	8
778482	8
778483	8
778484	7
778485	7
778486	7
778487	7
778488	7
778489	7
778490	7
778491	7
778492	8
778493	7
778494	7
778495	7
778496	7
778497	7
778498	7
778499	7
778500	7
778501	7
778502	7
778503	7
778504	7
778505	7
778506	7
778507	7
778508	7
778509	7
778510	7
778511	7
778512	8
778513	8
778514	8
778515	8
778516	8
778573	7
778574	7
778575	8
780000	15
780411	9
780424	5
780450	2
780450	3
780451	2
780451	3
781021	2
781022	2
781024	3
781025	3
781026	3
781501	19
781501	21
781720	19
781720	21
781722	19
781722	22
781723	19
781723	22
781725	12
781726	20
781727	18
781727	20
781740	18
781740	20
781901	18
781901	20
781949	12
782006	2
782009	2
782113	13

SMITH CORONA

XL2000 (5AEB)

SL105 (5ACB)

COMMITMENT TO EXCELLENCE

SMITH CORONA

PARTS MANUAL

Printed in U.S.A. Form 3-0735 © Copyright 1987 by Smith Corona Corporation

PREFACE

This Parts Manual lists and illustrates parts and electronic components necessary for the maintenance of the following Smith Corona 5A Series Electronic Typewriters:

MODEL PREFIX	MODEL NAME	COLOR
5AEB	XL-2000	PLATINUM
5ACB	SL-105	GRAY
5APB	CXL-4500	PLATINUM
5AWB	MARK X	PLATINUM

Unless specified, all parts are common to all four of the above models.

A Reference Number is used on parts illustrations, and a Component Number is used for each Component on the Control PC Board diagrams. The number is listed numerically in the parts listing beneath the illustration or diagram, and refers directly to the part number.

When an illustrated part has variations in appearance, color, voltage, etc., the reference number appears more than once in the "REF" or "COMPONENT" column. Use extreme care in selecting parts in these areas.

If the part number is known, the page on which it is listed can readily be found by reference to the numerical parts listing at the end of the Manual.

ORDERING INSTRUCTIONS: State the correct part number on all parts orders. State additional information if asked for. It is not necessary to state the part name unless the part number is not known. Do not order by reference numbers.

NOTICE

Smith Corona encourages PC Board repair by qualified technicians. If, however, after trying to repair a PC Board, the Board still does not work properly, return the Board to Smith Corona National Service Stores for warranty or repair exchange.

IMPORTANT: SMITH CORONA DOES NOT REPLACE OR EXCHANGE DAMAGED PC BOARDS (IN OR OUT OF WARRANTY).

Boards will be returned as irrepairable and no credits or exchanges issued when:

- There are missing components
- There are damaged or lifted traces
- There are solder burns
- There is any other Board damage which makes the Board irrepairable

Smith Corona reserves the right to discontinue parts at any time and/or to furnish substitutes.

CONTENTS

	PAGE NUMBER
JACKETS	2
CARRIER MOLDING, RAILS, & FRAMES	3
KEYBOARD	4
KEYBUTTON REFERENCE CHART	5
CARRIER DRIVE	6
ELEMENT DRIVE	7
RIBBON DRIVE	8
CASSETTE AND CORRECTION RIBBON	9
HAMMER	10
PAPER FEED	11
CONTROL PC BOARD & TRANSFORMER	12
CONTROL PC BOARD COMPONENTS	13-14
NUMERICAL INDEX	15-16

2

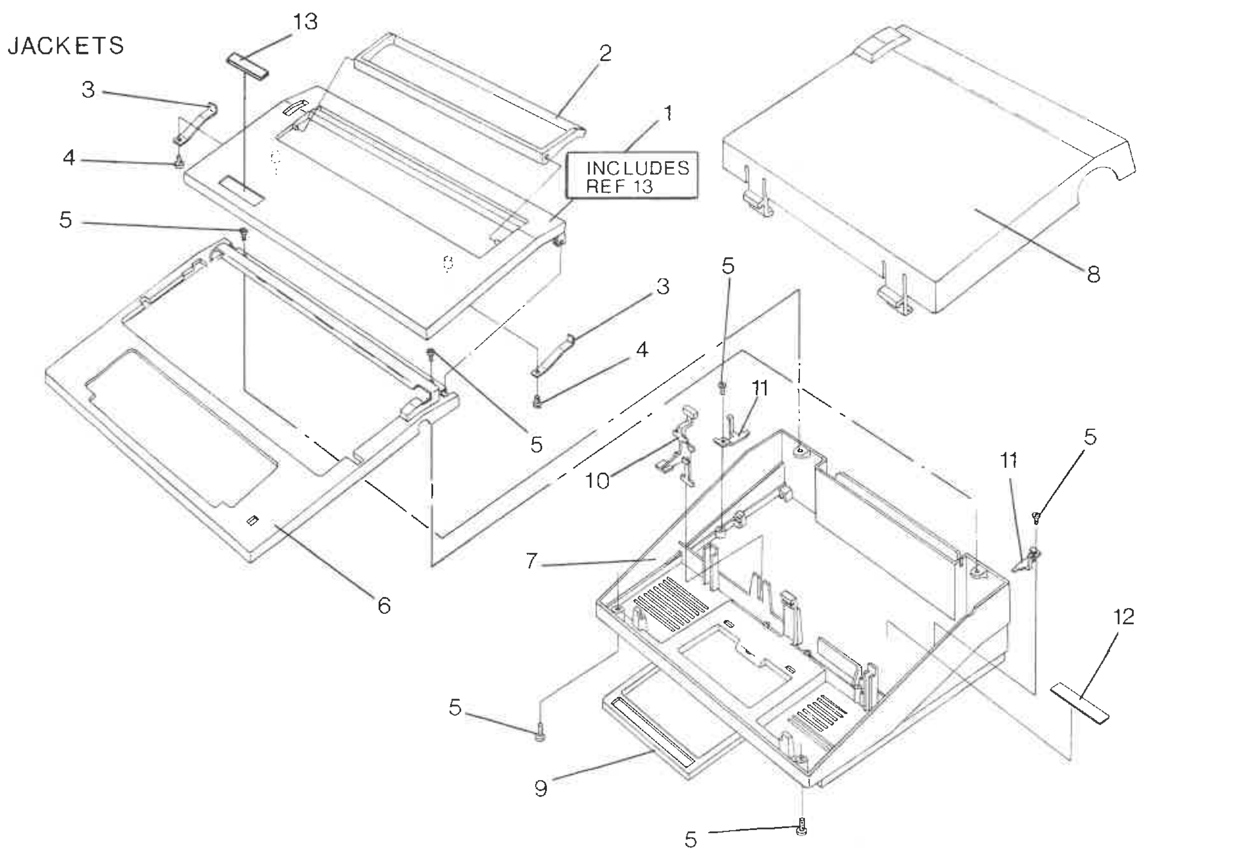

REF	PART NUMBER	PART NAME	QTY
1	771375	Deck Assembly (5ACB)	1
1	771376	Deck Assembly (5AEB)	1
1	771379	Deck Assembly (5AWB)	1
1	771377	Deck Assembly (5APB)	1
2	770680	Paper Bail	1
3	770000	Paper Bail Detent	2
4	770672	Paper Bail Screw	2
5	747258	Mask Screw	6
6	770114	Mask (5ACB)	1
6	770115	Mask (5AEB, 5APB, 5AWB)	1
7	770870	Casing Base (5ACB)	1
7	770871	Casing Base (5AEB, 5APB, 5AWB)	1
8	770014	Casing Lid (5ACB)	1
8	770015	Casing Lid (5AEB, 5APB, 5AWB)	1
9	780451	Casing Base Handle (5ACB)	1
9	780450	Casing Base Handle (5AEB, 5APB, 5AWB)	1
10	771057	Lid Switch Actuator	1
11	770829	Foot Retainer	2
12	701712	Warning Label USA	1
12	706057	Warning Label FR/CAN	1
13	729572	Deck Nameplate	1

CARRIER MOLDING, RAILS & FRAMES

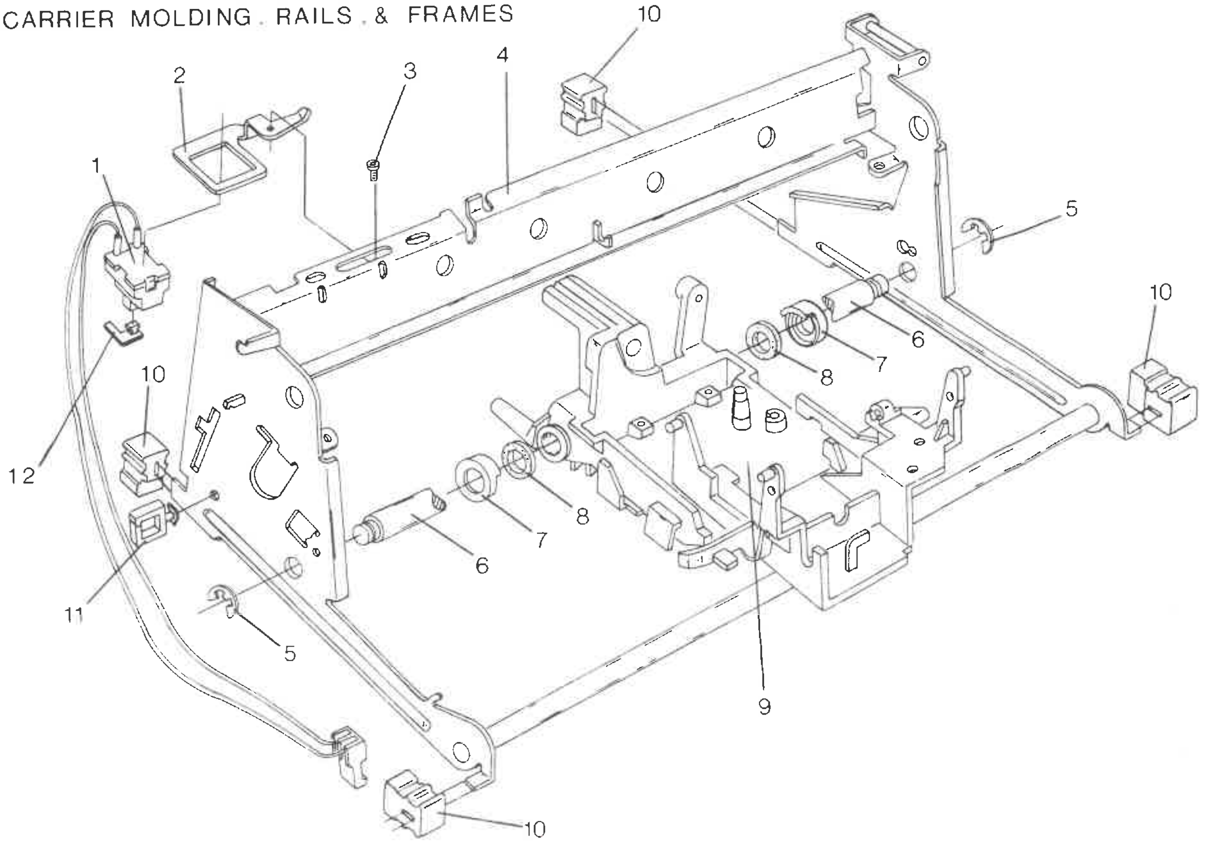

REF	PART NUMBER	PART NAME	QTY
1	750027	Left End Switch Assembly	1
2	751812	Switch Mount Bracket	1
3	748366	Screw, Pan-Torx	1
4	770985	Frame Assembly Complete	1
5	105100	Retaining Ring	2
6	770265	Rear Carrier Shaft	1
7	740257	Wiper Retainer	2
8	740084	Wiper	2
9	770665	Molded Carrier	1
10	770435	Foot	4
11	717087	Cable Clamp	1
12	751810	Switch Cap	1

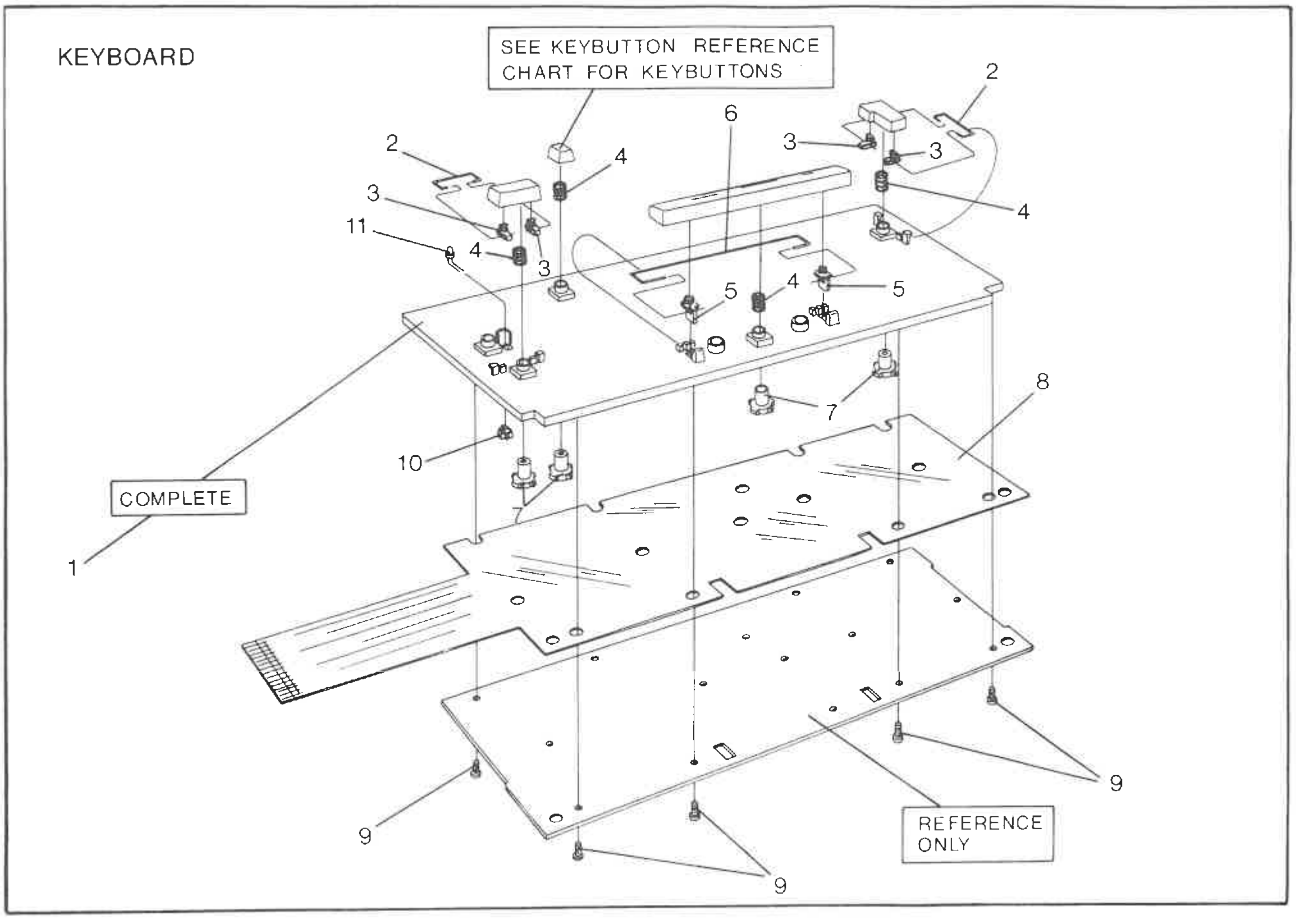

REF	PART NUMBER	PART NAME	QTY
1	770369	Keyboard Complete US, CAN/AM	1
1	770370	Keyboard Complete FR/CAN	1
2	742971	Retainer Bar	2
3	742972	Pivot, Retainer Bar	4
4	742968	Spring, Keybutton	56
5	742977	Pivot, Retainer Bar	2
6	742976	Retainer Bar	1
7	742970	Keyplunger	56
8	742973	PC Board	1
9	742978	Screw	16
10	742975	Contact, Shift Lock LED	1
11	742974	Shift Lock LED	1

KEYBUTTON REFERENCE CHART

KEYBOARD CODES:
US -- UNITED STATES 1063 KEYBOARD
EC -- ENGLISH CANADIAN 1063 KEYBOARD
FC -- FRENCH CANADIAN 1132 KEYBOARD

COLOR CODE:
ALL DOVER WHITE

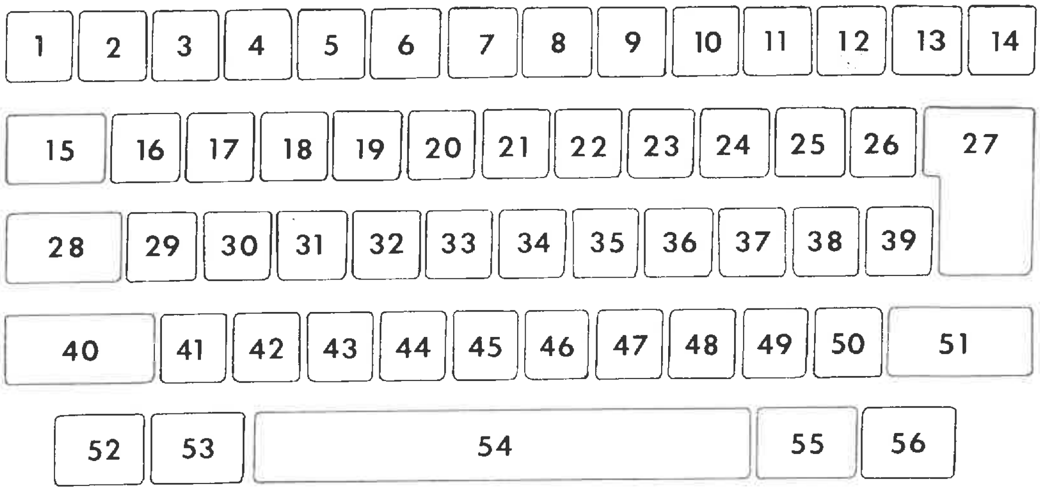

REF	PART NUMBER	ITEM
1	742867	TAB S/C
2	742868	1 US, EC
2	742923	1 FC
3	742869	2 US, EC
3	742924	2 FC
4	742870	3 US, EC
4	742925	3 FC
5	742871	4
6	742872	5
7	742873	6 US, EC
7	742926	6 FC
8	742874	7
9	742875	8 US, EC
9	742927	8 FC
10	742876	9
11	742877	0
12	742878	_/-
13	742879	+/=
14	742880	BACKSPACE
15	742881	TAB
16	742882	Q US, EC
16	742928	Q FC
17	742883	W US, EC
17	742929	W FC
18	742884	E US, EC
18	742930	E FC
19	742885	R US, EC
19	742931	R FC
20	742886	T US, EC
20	742932	T FC
21	742887	Y US, EC
21	742933	Y FC
22	742888	U US, EC
22	742934	U FC
23	742889	I US, EC
23	742935	I FC
24	742890	O
25	742891	P
26	742892	1/4 OVER 1/2 US, FC, EC
27	742893	RETURN/RELOCATE
28	742894	LOCK
29	742895	A
30	742896	S
31	758129	D/DICTIONARY
32	758130	F/FIND
33	742899	G
34	742900	H
35	742901	J
36	742902	K
37	742903	L
38	742904	:/; US, FC, EC
39	742905	"/' US, EC
39	742936	CIRCUMFLEX/GRAVE FC
40	742906	SHIFT, LEFT
41	742907	Z
42	742908	X
43	742909	C
44	742910	V
45	758240	B/BOLD
46	742912	N
47	742913	M
48	742914	,/, US, EC
48	742937	?/, FC
49	742915	./.
50	742916	? OVER / US, EC
50	742938	c CEDILLA/e ACUTE FC
51	742917	SHIFT, RIGHT
52	742918	CODE
53	742919	MARGIN L-R
54	742920	SPACEBAR/HALFSPACE
55	742921	WORDERASER
56	742922	CORRECT

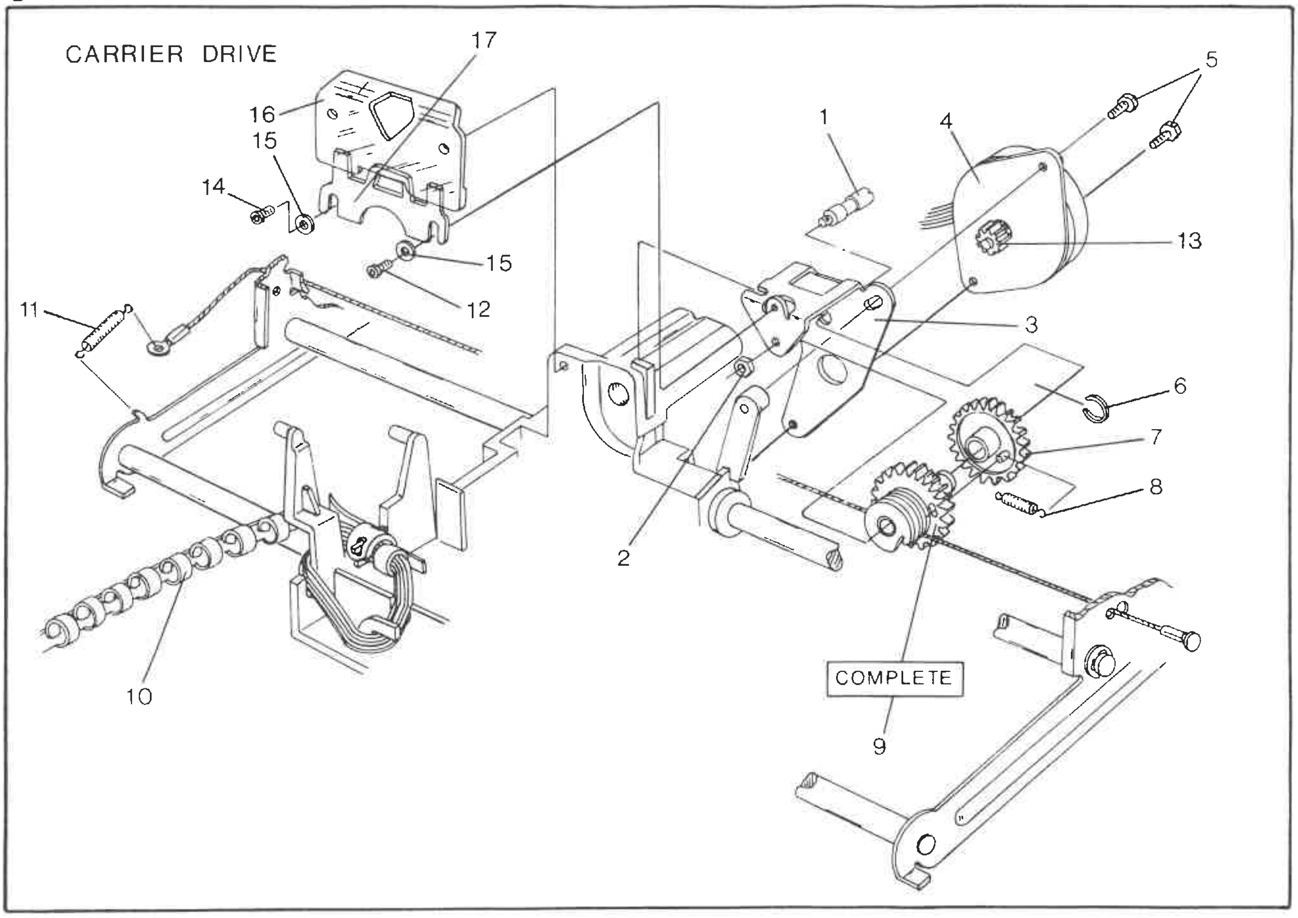

REF	PART NUMBER	PART NAME	QTY
1	747082	Capstan Pivot Screw	1
2	100200	Capstan Nut	1
3	751144	Capstan Bracket	1
4	770170	Carrier Motor Assembly	1
5	747057	Carrier Motor Screw	2
6	741374	Retaining Ring	1
7	743088	Carrier Drive Gear	1
8	743290	Capstan Scissor Spring	1
9	770319	Gear/Cable Assembly	1

REF	PART NUMBER	PART NAME	QTY
10	770317	Wire Binder Retainer	1
11	770430	Carrier Cable Spring	1
12	748366	Pan Torx Screw	1
13	364646	Carrier Motor Gear	1
14	748367	Self Tap Torx Screw	1
15	745345	Line Indicator Washer	2
16	770443	Line Indicator	1
17	770442	Line Indicator Bracket	1

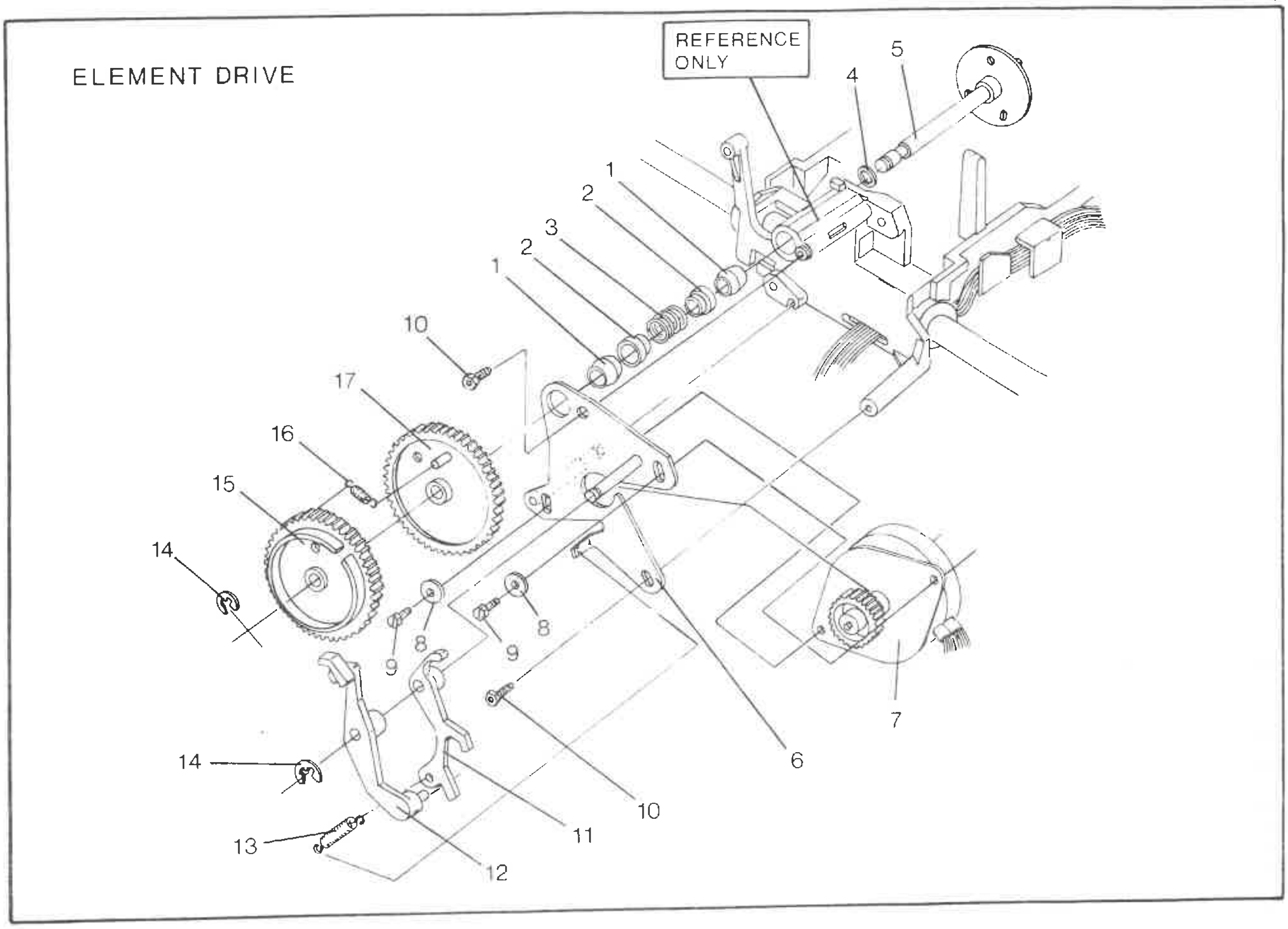

REF	PART NUMBER	PART NAME	QTY
1	740143	Element Shaft Bearing	2
2	745324	Element Shaft Bushing	2
3	745897	Element Shaft Spring	1
4	740001	Thrust Washer	1
5	740004	Element Shaft	1
6	749961	Element Motor Plate	1
7	770175	Element Motor Assembly	1
8	105090	Flat Washer	2
9	770297	Torx/Hex Head Screw	2
10	747057	Self Tap Torx Screw	2
11	749967	Element Home Actuator	1
12	751817	Element Home Latch	1
13	770685	Element Latch Spring	1
14	467980	Retaining Ring	2
15	749965	Element Gear	1
16	771260	Element Gear Spring	1
17	745321	Element Shaft Gear	1

RIBBON DRIVE

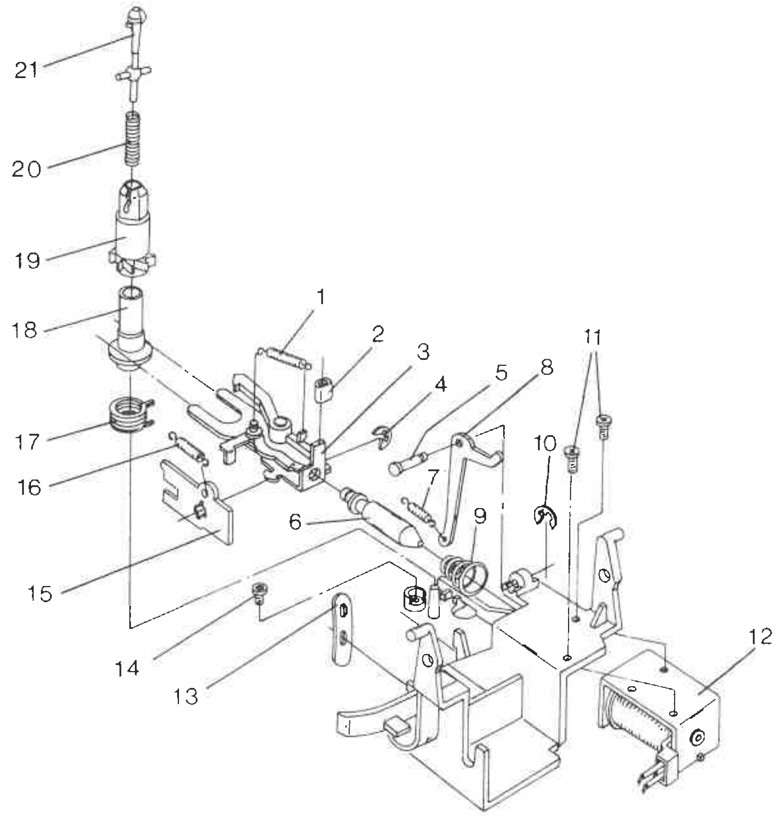

REF	PART NUMBER	PART NAME	QTY
1	740111	Ribbon Feed Spring	1
2	749494	Ribbon Feed Tubing	1
3	770290	Ribbon Feed Assembly	1
4	467980	Retaining Ring	1
5	770295	Correction Stud	1
6	770267	Ribbon Feed Plunger	1
7	428090	Correction Lift Spring	1
8	770294	Correction Lift Bellcrank	1
9	770277	Plunger Return Spring	1
10	102271	Retaining Ring	1
11	751055	Torx Screw	2
12	780286	Ribbon Drive Solenoid	1
13	770298	Wire Strap	1
14	747258	Torx Screw	1
15	770272	Black Feed Pawl Latch	1
16	770276	Black Latch Spring	1
17	770833	Anti-Backup Feed Spring	1
18	770161	Ribbon Feed Shaft	1
19	770164	Ribbon Drive Ratchet Hub	1
20	749841	Ribbon Driver Spring	1
21	770292	Ribbon Driver	1

CASSETTE & CORRECTION RIBBON

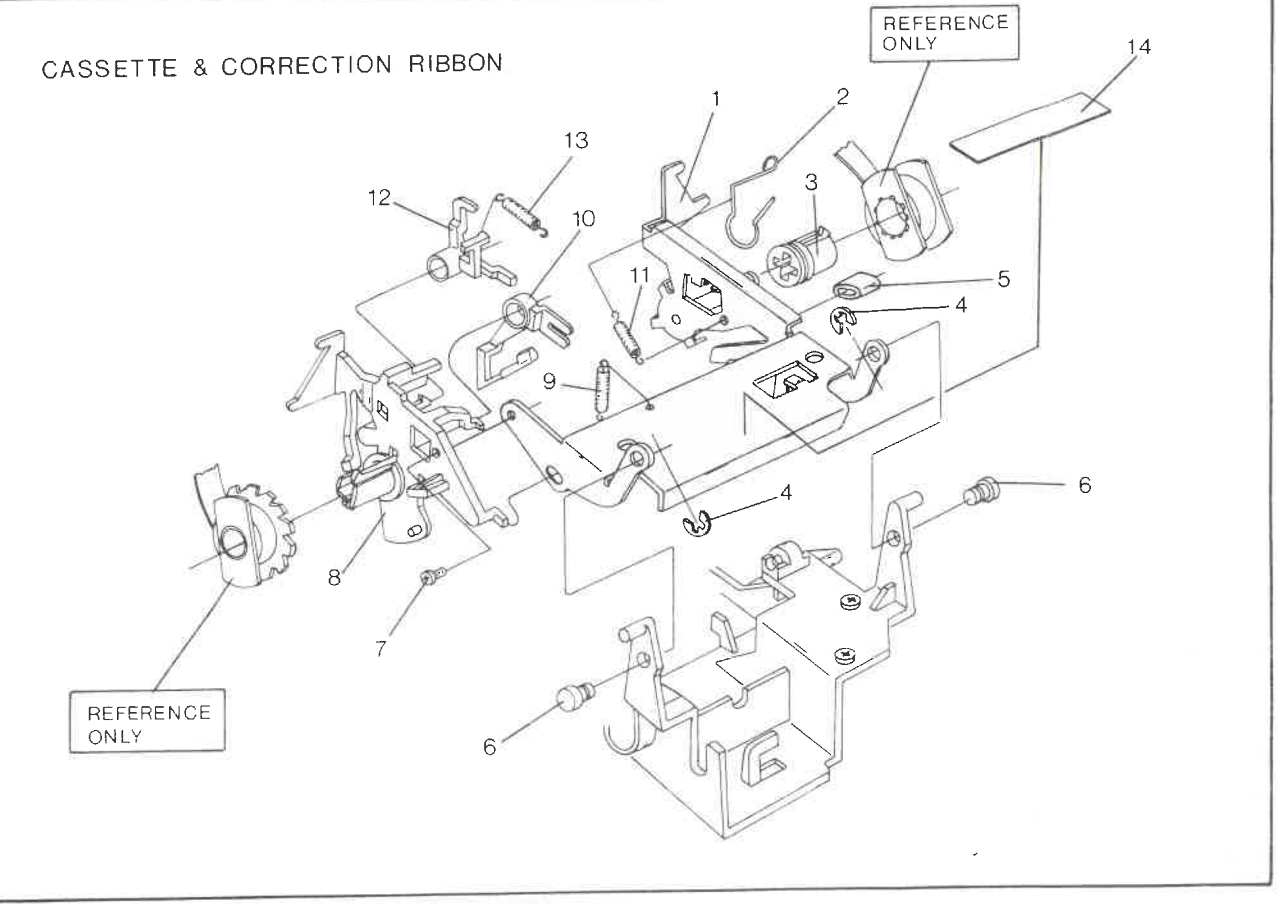

REF	PART NUMBER	PART NAME	QTY
1	771058	Correction Bail Assembly	1
2	740104	Correction Brake Spring	1
3	740108	Correction Spool Hub	1
4	701145	Retaining Ring	2
5	749494	Correction Bumper	1
6	770266	Correction Bail Stud	2
7	752247	Phillips Screw	1
8	770293	Left Correction Arm	1
9	770686	Correction Bail Spring	1
10	770288	Correction Feed Pawl	1
11	428090	Brake Spring	1
12	770291	Cassette Latch	1
13	740111	Correction Arm Spring	1
14	751051	Carrier Supplies Label USA, CAN/AM	1
14	745445	Carrier Supplies Label FR/CAN	1

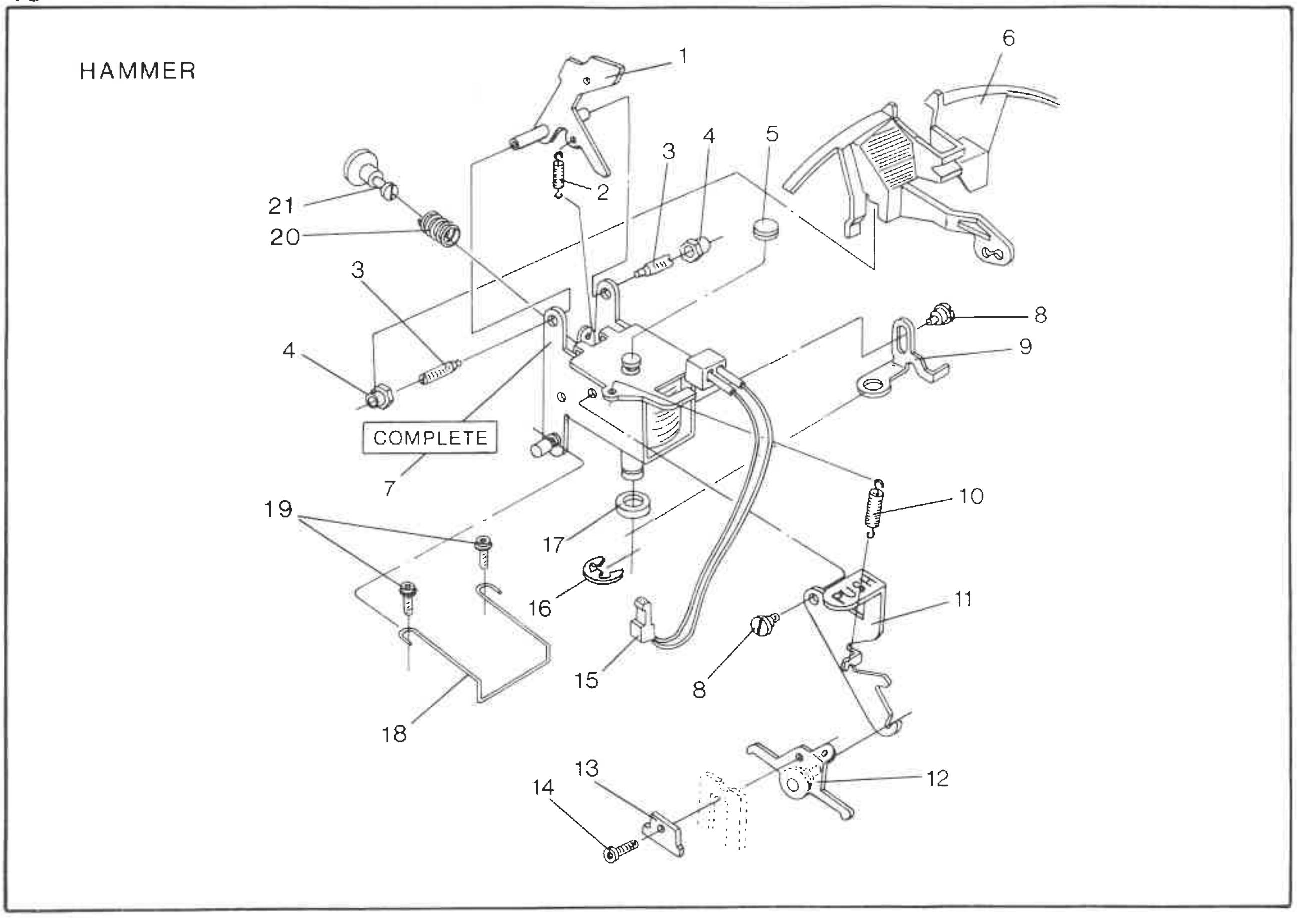

REF	PART NUMBER	PART NAME	QTY
1	748793	Hammer	1
2	748802	Hammer Spring	1
3	740066	Pivot Screw	2
4	770296	Pivot Nut	2
5	770987	Plunger Cap	1
6	770185	Ribbon Guide	1
7	780381	Hammer Solenoid Complete	1
8	741510	Latch Screw	2
9	770162	Latch Trip	1
10	748601	Hammer Latch Spring	1
11	770187	Hammer Latch Lever	1
12	770432	Hammer Plate Assembly	1
13	770280	Hammer Adjustment Washer	1
14	770297	Hex Torx Screw	1
15	751057	MTA Connector 2 Pin	1
16	771463	E-Ring	1
17	748562	O-Ring	1
18	749789	Hammer Solenoid Retainer	1
19	747258	Self Tap Torx Screw	2
20	770924	Pusher Spring	1
21	749735	Printwheel Pusher	1

PAPER FEED

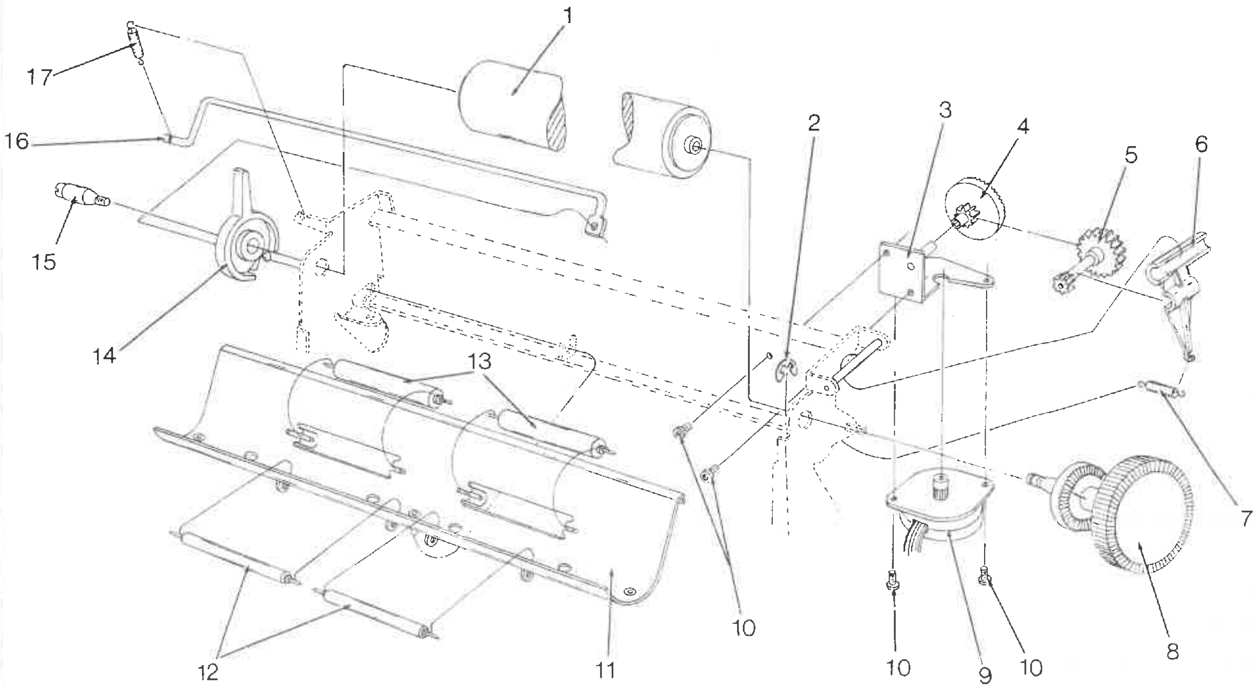

REF	PART NUMBER	PART NAME	QTY
1	748800	Platen Assembly	1
2	743193	Retaining Ring	1
3	770191	Linespace Bracket	1
4	770165	Pinion Face Gear	1
5	750056	Linespace Pinion	1
6	752319	Linespace Pinion Pivot	1
7	770199	Linespace Pinion Spring	1
8	770250	Platen Knob (5ACB)	1
8	770254	Platen Knob (5AEB, 5APB, 5AWB)	1

REF	PART NUMBER	PART NAME	QTY
9	770180	Linespace Motor Assembly	1
10	752247	Pan Torx Screw	4
11	748991	Paper Table	1
12	751222	Paper Feed Shaft, Front	2
13	751223	Paper Feed Shaft, Rear	2
14	750077	Paper Release Lever	1
15	750075	Left Platen Shaft	1
16	748995	Paper Release Shaft	1
17	751437	Paper Release Spring	1

CONTROL PC BOARD

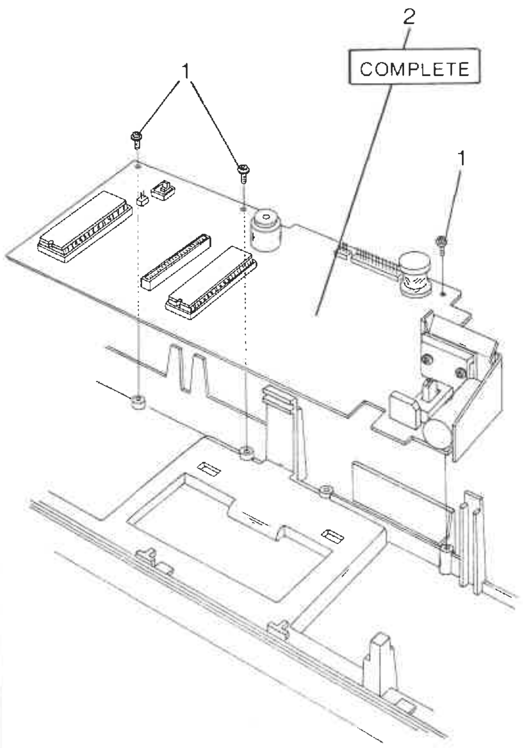

TRANSFORMER

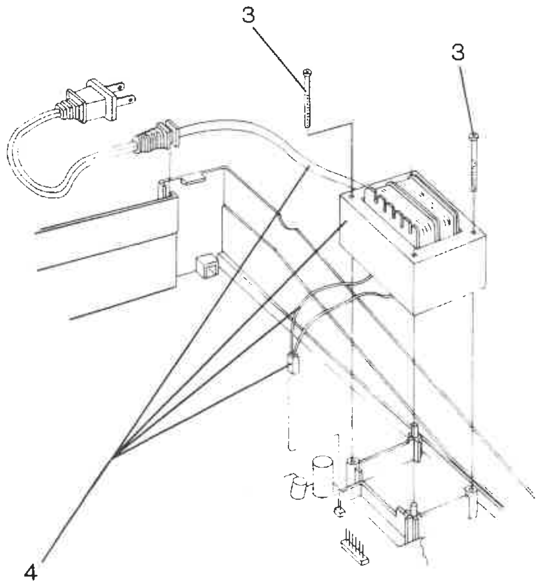

REF	PART NUMBER	PART NAME	QTY
1	747258	Torx Head Screw	3
2	771155	Control PC Board USA, CAN/AM	1
2	771156	Control PC Board FR/CAN	1

REF	PART NUMBER	PART NAME	QTY
3	770434	Transformer Screw	2
4	770821	Transformer Assembly	1

COMPONENT DIAGRAM
CONTROL PC BOARD
MODELS 5AEB, 5ACB

P/N 771155
771156

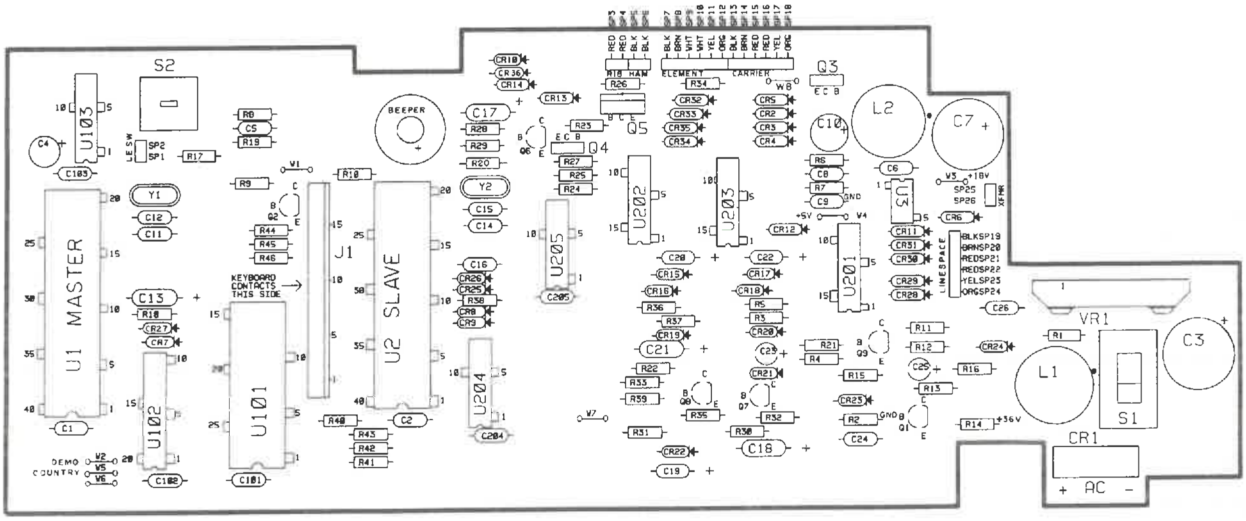

COMPONENT	PART NUMBER	DESCRIPTION
C1, C2, C6, C16, C24, C101	741566	CAPACITOR, .1 uf/50V, AXIAL, CERAMIC
C3	770215	CAPACITOR, 2200 uf/35V, RAD., ELEC.
C4	749336	CAPACITOR, 6.8 uf/16V, RAD., TANTALUM
C5, C102, C103, C204, C205	700341	CAPACITOR, .01 uf/50V, AXIAL, CERAMIC
C7	730001	CAPACITOR, 2200 uf/25V, ELEC., ALUMINUM
C8, C11, C12, C14, C15	700360	CAPACITOR, 20 pf/100V, AXIAL, CERAMIC
C9	700356	CAPACITOR, 2000 pf/50V, AXIAL, CERAMIC
C10	770204	CAPACITOR, 470 uf/6.3V, ELEC., ALUMINUM
C13, C18, C21	700390	CAPACITOR, 10 uf/10V, AXIAL, TANTALUM
C17	700391	CAPACITOR, 2.2 uf/10V, AXIAL, TANTALUM
C19, C20, C22	724673	CAPACITOR, 1 uf/35V, AXIAL, TANTALUM
C23	770209	CAPACITOR, 47 uf/16V, RAD., ELEC.
C25	770208	CAPACITOR, 22 uf/16V, RAD., ELEC.
C26	741573	CAPACITOR, .1 uf/100V, AXIAL, CERAMIC
CR1	770801	4 AMP, BRIDGE RECTIFIER
CR2-CR5, CR28-CR35	746184	DIODE, 1 AMP, RECTIFIER, 1N4002
CR6	760421	DIODE, 1 AMP, SCHOTTKY, 1N5819
CR7-CR10, CR15-CR27	709100	DIODE, SILICON, SWITCHING, 1N914
CR11, CR12	700521	DIODE, SILICON, RECTIFIER, 1N4001
CR13, CR14	722058	DIODE, 1 AMP, FAST RECOVERY, 1N4933
CR36	780280	DIODE, 1 AMP, ZENER, 5V
J1	770150	CONNECTOR, .100, 17 POSITION, FLEX CABLE
L1	770309	INDUCTOR, VERTICAL MOUNT, 330 uH, 1 AMP
L2	781560	INDUCTOR, VERTICAL MOUNT, 270 uH, 6 AMP
LS1 (BEEPER)	728783	AUDIO TRANSDUCER, 12V
Q1	703714	TRANSISTOR, PNP, DARLINGTON, TO-92, 2N3906
Q2, Q6-Q9	702518	TRANSISTOR, PNP, DARLINGTON, TO-92, 2N3904
Q3	740344	TRANSISTOR, PNP, DARLINGTON, TO-126, 2N6035
Q4	743086	TRANSISTOR, NPN, DARLINGTON, TO-126, 2N6039
Q5	770302	TRANSISTOR, NPN, DARLINGTON, TO-220, 2N6045
R1, R23, R24	701280	RESISTOR, 1.8 K OHM, 1/4 W, 5%
R2, R11, R32, R35	701275	RESISTOR, 22 K OHM, 1/4 W, 5%
R3, R8, R28, R36-R38, R40-R46	701268	RESISTOR, 10 K OHM, 1/4 W, 5%
R4	701297	RESISTOR, 5.6 K OHM, 1/4 W, 5%
R5	748227	RESISTOR, 220 K OHM, 1/4 W, 5%
R6	748281	RESISTOR, 40.2 K OHM, 1/4 W, 5%

COMPONENT DIAGRAM
CONTROL PC BOARD
MODELS 5AEB, 5ACB

P/N 771155
771156

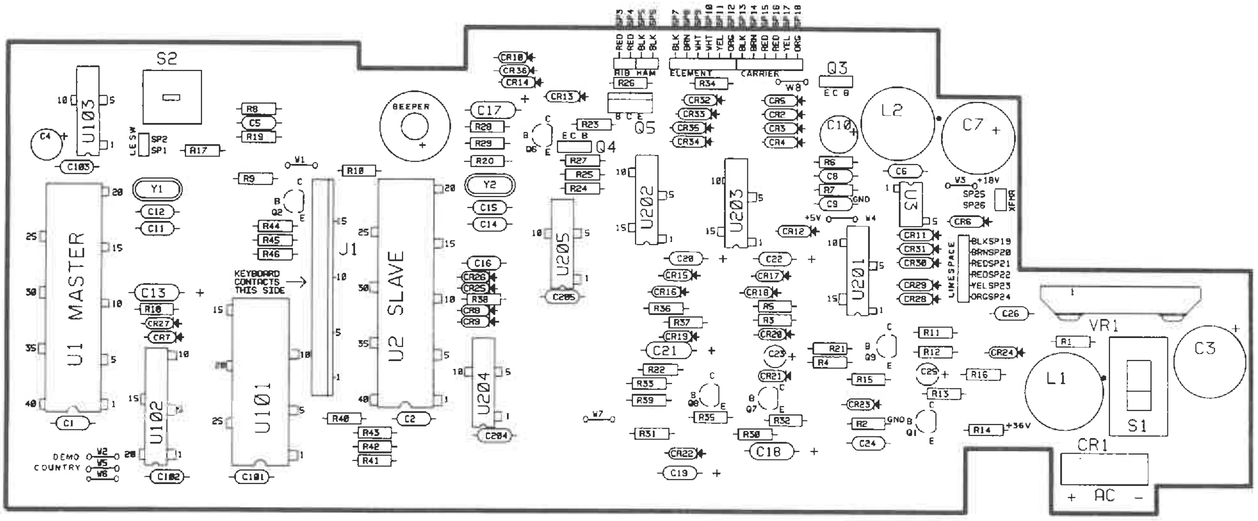

COMPONENT	PART NUMBER	DESCRIPTION
R7	748279	RESISTOR, 10 K OHM, 1/4 W, 5%
R9, R19, R21, R22, R39	701272	RESISTOR, 3.9 K OHM, 1/4 W, 5%
R10	701252	RESISTOR, 220 OHM, 1/4 W, 5%
R12, R16	760611	RESISTOR, 1 K OHM, 1/4 W, 5%
R13	701299	RESISTOR, 8.2 K OHM, 1/4 W, 5%
R14	701266	RESISTOR, 100 OHM, 1/4 W, 5%
R15	748226	RESISTOR, 82 K OHM, 1/4 W, 5%
R17	701253	RESISTOR, 270 OHM, 1/4 W, 5%
R18	727474	RESISTOR, 4.3 K OHM, 1/4 W, 5%
R20	746938	RESISTOR, 390 OHM, 1/4 W, 5%
R25, R27	749348	RESISTOR, 180 OHM, 1/4 W, 5%
R26	771149	RESISTOR, 11 OHM, 1/4 W, FLYBACK
R29	748221	RESISTOR, 27 K OHM, 1/4 W, 5%
R30, R33	701287	RESISTOR, 39 K OHM, 1/4 W, 5%
R31, R34	701263	RESISTOR, 100 K OHM, 1/4 W, 5%
S1	770822	SLIDE SWITCH, SPDT
S2	770851	LID SWITCH
SP1-SP26	748856	STAKE PIN, .025 SQUARE
U1	752400	IC, MICROPROCESSOR, MASTER, 8032 AH
U101	750540	IC, ROM, USA CANADIAN/AMERICAN
U101	750534	IC, ROM, FRENCH/CANADIAN
U102	709684	IC, TTL-LS, OCTAL D-TYPE, 74LS373
U103	709683	IC, TTL-LS, 4 AND GATES, 74LS08
U2	750541	IC, MICROPROCESSOR, SLAVE, 8052
U201, U202, U203	770307	IC, QUAD DRIVER, L-6221B
U204	705236	IC, TTL, HEX INVERTER, 74LS04
U205	724700	IC, HEX BUFFER, OPEN COLLECTOR 7406
U3	770300	IC, SWITCHING REGULATOR, LM3578CT
VR1	770303	REGULATOR, 12V HYBRID, STR2012
W1, W3, W4, W7, W8	705294	JUMPER WIRE
Y1, Y2	770304	CRYSTAL, 12 MHz

PART NUMBER	PAGE NUMBER
100200	6
102271	8
105090	7
105100	3
364646	6
428090	8
428090	9
467980	7
467980	8
700341	13
700356	13
700360	13
700390	13
700391	13
700521	13
701145	9
701252	14
701253	14
701263	14
701266	14
701268	13
701272	14
701275	13
701280	13
701287	14
701297	13
701299	14
701712	2
702518	13
703714	13
705236	14
705294	14
706057	2
709100	13
709683	14
709684	14
717087	3
722058	13
724673	13
724700	14
727474	14
728783	13
729572	2
730001	13
740001	7
740004	7
740066	10
740084	3
740104	9
740108	9
740111	8
740111	9
740143	7
740257	3
740344	13
741374	6
741510	10
741566	13
741573	13
742867	5
742868	5
742869	5
742870	5
742871	5
742872	5
742873	5
742874	5
742875	5
742876	5
742877	5
742878	5
742879	5
742880	5
742881	5
742882	5
742883	5
742884	5
742885	5
742886	5
742887	5
742888	5
742889	5
742890	5
742891	5
742892	5
742893	5
742894	5
742895	5
742896	5
742899	5
742900	5
742901	5
742902	5
742903	5
742904	5
742905	5
742906	5
742907	5
742908	5
742909	5
742910	5
742912	5
742913	5
742914	5
742915	5
742916	5
742917	5
742918	5
742919	5
742920	5
742921	5
742922	5
742923	5
742924	5
742925	5
742926	5
742927	5
742928	5
742929	5
742930	5
742931	5
742932	5
742933	5
742934	5
742935	5
742936	5
742937	5
742938	5
742968	4
742970	4
742971	4
742972	4
742973	4
742974	4
742975	4
742976	4
742977	4
742978	4
743086	13
743088	6
743193	11
743290	6
745321	7
745324	7
745345	6
745445	9
745897	7
746184	13
746938	14
747057	6
747057	7
747082	6
747258	2
747258	8
747258	10
747258	12
748221	14
748226	14
748227	13
748279	14
748281	13
748366	3
748366	6
748367	6
748562	10
748601	10
748793	10
748800	11
748802	10
748856	14
748991	11
748995	11
749336	13
749348	14
749494	8
749494	9
749735	10
749789	10
749841	8
749961	7
749965	7
749967	7
750027	3
750056	11
750075	11
750077	11
750534	14
750540	14

PART NUMBER	PAGE NUMBER
750541	14
751051	9
751055	8
751057	10
751144	6
751222	11
751223	11
751437	11
751810	3
751812	3
751817	7
752247	9
752247	11
752319	11
752400	14
758129	5
758130	5
758240	5
760421	13
760611	14
770000	2
770014	2
770015	2
770114	2
770115	2
770150	13
770161	8
770162	10
770164	8
770165	11
770170	6
770175	7
770180	11
770185	10
770187	10
770191	11
770199	11
770204	13
770208	13
770209	13
770215	13
770250	11
770254	11
770265	3
770266	9
770267	8
770272	8
770276	8
770277	8
770280	10
770288	9
770290	8
770291	9
770292	8
770293	9
770294	8
770295	8
770296	10
770297	7
770297	10
770298	8
770300	14
770302	13
770303	14
770304	14
770307	14
770309	13
770317	6
770319	6
770369	4
770370	4
770430	6
770432	10
770434	12
770435	3
770442	6
770443	6
770665	3
770672	2
770680	2
770685	7
770686	9
770801	13
770821	12
770822	14
770829	2
770833	8
770851	14
770870	2
770871	2
770924	10
770985	3
770987	10
771057	2
771058	9
771149	14
771155	12
771156	12
771260	7
771375	2
771376	2
771377	2
771379	2
771463	10
780280	13
780286	8
780381	10
780450	2
780451	2
781560	13

SMITH CORONA

SERVICE BULLET

TO: Technical Service & Training
Regional Service Managers
Service Locations
Canada & International
5 Series Electronic Dealers

SUBJECT: CONSOLIDATED LIST OF PC BOARD PART NUMBERS

NO: 6E Electronic Miscellaneous

PRODUCT: ELECTRONIC PRINTERS AND TYPEWRITERS

DATE: MAY 1987

When ordering PC Boards, use only the part numbers listed in this Bulletin or in Part Manuals. DO NOT use part numbers printed on PC Boards; they do not reflect the stage of assembly carried by Service Stores. This Bulletin supersedes previously released Electronic Miscellaneous Bulletins #6 through #6D.

SINGLE PITCH TYPEWRITERS

PREFIX	DESCRIPTION	PC BOARD PART NUMBER(S)	
1EBA	TYPETRONIC	DRIVER	709715
1EBB	TYPETRONIC II	DRIVER	353175
		CONTROL	353240
1ECA	MEMORY CORRECT	DRIVER	709715
1ECC	CITATION	DRIVER	709715
1EPA	ULTRASONIC	DRIVER	709715
1EPC	ULTRASONIC ONE PLUS	DRIVER	353112

SINGLE PITCH PRINTERS

PREFIX	DESCRIPTION	PC BOARD PART NUMBER(S)	
1PTP	TP-I (PARALLEL)	DRIVER	715456 TYPE 1
		INTERFACE	719084 TYPE 1
		DRIVER	721303 TYPE 2
		INTERFACE	719886 TYPE 2
1PTS	TP-I (SERIAL)	DRIVER	715456 TYPE 1
		INTERFACE	720955 TYPE 1
		DRIVER	721303 TYPE 2
		INTERFACE	719884 TYPE 2
1PTD	TP-II	DRIVER	353284
		INTERFACE	353407

MULTIPITCH TYPEWRITERS

PREFIX	DESCRIPTION	PC BOARD PART NUMBER(S)
1MCA	MEMORY CORRECT III MESSENGER	353381
1MCB	CITATION III MESSENGER	353381
1MCC	MEMORY CORRECT III	353381
1MCD	MEMORY CORRECT II	353384
	(See 1 Series Electronic Multipitch Typewriter Bulletin #19 for more information)	353385 SP/AM KEYBOARD
		353386 FR/CAN KEYBOARD
	MEMORY CORRECT II W/DEEP DEPRESSION KEYBOARD	353384X
1MCE	MEMORY CORRECT 400 MESSENGER	726673
1MCF	MEMORY CORRECT 300	726673

For prices refer to the current Smith Corona Parts Price List.
Smith Corona reserves the right to discontinue parts at any time and/or to furnish substitutes.

- OVER -

Printed in U.S.A.

MULTIPITCH TYPEWRITERS (continued)

PREFIX	DESCRIPTION	PC BOARD PART NUMBER(S)
1MCG	MEMORY CORRECT 200	726688
		726689 SP/AM KEYBOARD
		726690 FR/CAN KEYBOARD
1MCH	CITATION 300 MESSENGER	726673
1MKA	DEVILLE III MESSENGER	353381
1MKB	DEVILLE 300 MESSENGER	726673
1MPA	ULTRASONIC III MESSENGER	353381
1MPD	ULTRASONIC III	353381
1MPE	ULTRASONIC II	353384
		353385 SP/AM KEYBOARD
		353386 FR/CAN KEYBOARD
	ULTRASONIC II W/DEEP DEPRESSION KEYBOARD	353384X
1MPF	ULTRASONIC 450 MESSENGER	726682
1MPG	ULTRASONIC 350 MESSENGER	726673
1MPH	ULTRASONIC 250	726688
	(See 1 Series Electronic Multipitch Typewriter	726689 SP/AM KEYBOARD
	Bulletin #19 for more information)	726690 FR/CAN KEYBOARD
1MPJ	S-II, VERSION 1	729480
	S-II, VERSION 2	726673

MULTIPITCH PRINTERS

1PMA	L-1000/TP-II PLUS	DRIVER 353391
		INTERFACE 353392

MESSENGER MODULE

R001		726295

DOT MATRIX PRINTERS

1D11	D100	590295
1D1A	D200	590088
1D1C	D200	590782
1D2A	D300	590414
1D2C	D300	590729
1D3A	FASTEXT 80	590663
1DCA	SERIAL INTERFACE	590826

GRAPHTEXT 90

1AAA	PC BOARD	594029

PERSONAL WORD PROCESSOR (PWP)

1TCA	SYSTEM 8 CPU PC BOARD	760023
1TEA	SYSTEM 12 CPU PC BOARD	760023
1TEB	SYSTEM 14 CPU PC BOARD	760565

TYPETRONIC III/EL 4000

2BAA	7801 B ELECTRONICS, RAM PC BOARD	590496
	7801 A ELECTRONICS, RAM PC BOARD	590714
	7801 A AND 7801 B ELECTRONICS, CONTROL PC BOARD	353-30006

5 SERIES TYPEWRITERS (VERSION 1) MODELS

PREFIX	DESCRIPTION	PC BOARD PART NUMBER(S)
5LCA	STERLING ELECTRONIC (BELOW S/N 1155300)	
5LCB	CITATION ELECTRONIC 100	
5LCC	CORONET ELECTRONIC I	
5LCE	CORONA ELECTRONIC (BELOW S/N 1104000)	
5LEA	ENTERPRISE ELECTRONIC (BELOW S/N 1142000)	
5LWA	ELECTRONIC MARK I	
	TYPE A, (LONG BOARD) NO WATCHDOG, POST HEADERS (HIGH INERTIA MOTORS)	743303
	TYPE A, (LONG BOARD) NO WATCHDOG, POST HEADERS (LOW INERTIA MOTORS)	743316
	TYPE B, (SHORT BOARD) WATCHDOG, POST HEADERS	745839
	TYPE B, (SHORT BOARD) WATCHDOG, SOLDER TABS	747109
	POWER SUPPLY (GREEN)	741656
5LCA	SE 100 (S/N 1155300 TO S/N 1256299)	
5LCE	CORONA ELECTRONIC (S/N 1104000 & ABOVE)	
5LEA	XE 5000 (S/N 1142000 TO S/N 1211299)	
5LKA	DEVILLE 100 (BELOW S/N 1118800)	
5LWB	MARK I (BELOW S/N 1101001)	
	TYPE A, (LONG BOARD) NO WATCHDOG, POST HEADERS	353605
	TYPE A, (LONG BOARD) NO WATCHDOG, SOLDER TABS	353609
	TYPE B, (SHORT BOARD) WATCHDOG, SOLDER TABS	747113
	TYPE C, (LONG BOARD) WATCHDOG, SOLDER TABS	353607
	TYPE D, (SHORT BOARD) WATCHDOG, SOLDER TABS FOUR ORANGE, RED OR YELLOW, ONE BLACK	749602
	POWER SUPPLY (J102--.156"; GREEN)	741656
	POWER SUPPLY (INTERIM DESIGN) (J102--.100"; TAN)	364595
	POWER SUPPLY (J102--.100"; TAN)	750021

SEE 5 SERIES (VERSION 1) ELECTRONIC TYPEWRITERS BULLETINS #12A-16, #28A, #45, #46, #48, #49, AND #51 FOR ADDITIONAL INFORMATION

5 SERIES TYPEWRITERS (VERSION 1) MODELS (continued)

REFIX	DESCRIPTION	PRINTED CIRCUIT BOARD PART NUMBER(S)		
LCD	STERLING ELECTRONIC II	CONTROL	--	747165
		POWER SUPPLY	--	749515
LCG	SE 200	CONTROL	--	748922
LED	XE 6000	POWER SUPPLY	(J102--.156"; GREEN)	749515
		POWER SUPPLY	(J102--.100"; TAN)	750021
LCH	SE 200 SR	CONTROL	--	353614
LEE	XE 6000 SR	POWER SUPPLY	(J102--.156"; GREEN)	749515
LKB	DEVILLE 200 SR	POWER SUPPLY	(J102--.100"; TAN)	750021
LWC	MARK II S			
LCF	SD 300	CONTROL	(J6--.156" CENTERS)	749424
LEC	XD 7000	CONTROL	(J6--.100" CENTERS)	749436
		POWER SUPPLY	(J102--.156"; GREEN)	749520
		POWER SUPPLY	(J102--.100"; TAN)	750021
LCI	SD 300 SR	CONTROL	(J6--.156" CENTERS)	353616
LEF	XD 7000 SR	CONTROL	(J6--.100" CENTERS)	353683
		POWER SUPPLY	(J102--.156"; GREEN)	749520
		POWER SUPPLY	(J102--.100"; TAN)	750021

SEE 5 SERIES (VERSION 1) ELECTRONIC TYPEWRITERS BULLETINS
#41 & #48 FOR ADDITIONAL INFORMATION

5 SERIES (VERSION 2) MODELS

REFIX	DESCRIPTION	PRINTED CIRCUIT BOARD PART NUMBER(S)	
LCA	SE 100 (S/N 1256300 & ABOVE)	CONTROL PC BOARD (SINGLE SIDED)	751108
LEA	XE 5000(S/N 1211300 & ABOVE)	POWER SUPPLY (J102--.156"; GREEN)	364608
LKA	DEVILLE 100 (S/N 1118800 & ABOVE)	POWER SUPPLY (J102--.100"; TAN)	750021
LWB	MARK I (S/N 1101001 & ABOVE)		

SEE 5 SERIES (VERSION 2) ELECTRONIC TYPEWRITERS BULLETINS
#2 AND #3 FOR ADDITIONAL INFORMATION

LCP	SC 100	CONTROL PC BOARD (SINGLE SIDED)	752192
LEN	XE 5000	POWER SUPPLY (SINGLE SIDED; TAN)	750021
		POWER SUPPLY (SINGLE SIDED; TAN; PDI)	751721

5 SERIES TYPEWRITERS (VERSION 2) MODELS (continued)

PREFIX	DESCRIPTION	PRINTED CIRCUIT BOARD PART NUMBER(S)	
5LCM	SC 110 SR I	CONTROL PC BOARD	
5LEL	XE 5100 SR I	(PLASTIC HOUSING KEYBOARD)	751740
5LKC	DEVILLE 110 SR I	CONTROL PC BOARD	
5LWE	MARK I SR	(METAL HOUSING KEYBOARD)	751746
		POWER SUPPLY (SINGLE SIDED; TAN)	750021
		POWER SUPPLY (SINGLE SIDED; TAN; PDI)	751721
5LCN	SC 210 SR II	CONTROL PC BOARD	
5LEM	XE 6100 SR II	(PLASTIC HOUSING KEYBOARD)	751560
5LKD	DEVILLE 210 SR II	CONTROL PC BOARD	
5LWF	MARK II SR	(METAL HOUSING KEYBOARD)	751570
		POWER SUPPLY (SINGLE SIDED; TAN)	750021
		POWER SUPPLY (SINGLE SIDED; TAN; PDI)	751721
5LCJ	SD 250 SR II	CONTROL PC BOARD	
5LEG	XD 6500 SR II	(PLASTIC HOUSING KEYBOARD)	752050
5LKE	DEVILLE 250 SR II	CONTROL PC BOARD	
5LWG	MARK VII SR	(METAL HOUSING KEYBOARD)	752060
		POWER SUPPLY (SINGLE SIDED; TAN; PDI)	751721
5LCL	SD 400 SR III	CONTROL PC BOARD (FOR 12V INDEX MOTOR)	752214
5LEH	XD 8000 SR III	CONTROL PC BOARD (FOR 36V INDEX MOTOR)	752417
		POWER SUPPLY (SINGLE SIDED; TAN; PDI)	751721

5A SERIES TYPEWRITERS

5ACA 5AEA 5AKA 5APA 5AWA	SL 80 XL 1000 DEVILLE 80 CXL 4000 MARK V	CONTROL PC BOARD (WITH MICROPROCESSOR U1, P/N 750436, 750437, 750447, 750448, OR 750455	770400
5ACA 5AEA 5AKA 5APA 5AWA	SL 80 XL 1000 DEVILLE 80 CXL 4000 MARK V	CONTROL PC BOARD WITH MICROPROCESSOR U1, P/N 750497 OR 750498	770414
5AEA	XL 1000 UK	CONTROL PC BOARD WITH MICROPROCESSOR U1, P/N 750536	770417
5AEB 5ACB 5APB 5AWB	XL 2000 SL 105 CXL 4500 MARK X	CONTROL PC BOARD	771155
5AEB	XL 2000 UK	CONTROL PC BOARD	771158

5P SERIES TYPEWRITERS

PREFIX	DESCRIPTION	PRINTED CIRCUIT BOARD PART NUMBER(S)	
5PEA	XE 5200	CONTROL PC BOARD	780300
5PCA	SC 125		
5PKA	DEVILLE 125		
5PWA	MARK XV		
5PEB	XE 6200	CONTROL PC BOARD	780315
5PEC	XD 6600	CONTROL PC BOARD	781450
5PCC	SD 265		
5PKA	DEVILLE 265		
5PWA	MARK XXV		
5PED	XD 6700	CONTROL PC BOARD	781457
5PCD	SD 275		

5 SERIES (VERSION 1) CONTROL PC BOARD CHARTS

5LEA ENTERPRISE ELECTRONIC BELOW S/N 1142000
5LCA STERLING ELECTRONIC BELOW S/N 1155300

US/ENGLISH CANADIAN

CONTROL PCB TYPE	CONTROL PCB	MOTORS	SLAVE EPROM U201	TYPE OF CABLE CONNECTOR (J2 & J4)	CARRIER RIBBON CABLES	POWER SUPPLY HARNESS	WATCHDOG CIRCUITRY	INDEX MOTOR	REFERENCE BULLETINS
A Long	743303	High Inertia Carrier-741273 Element-741274	729279 High Inertia	Post Headers	741399 (Short) 741400 (Long)	741509	External Watchdog PCB Needed	745285	12A 15
A Long	743316	Low Inertia Carrier-745286 Element-745287	729292 Low Inertia	Post Headers	741399 (Short) 741400 (Long)	741509	External Watchdog PCB Needed	745285	12A 15
B Short	745839	Low Inertia Carrier-745286 Element-745287	N/A Masked Processor Low Inertia	Post Headers	741399 (Short) 741400 (Long)	745911	Internal On Board	745288	13
B Short	747109	Low Inertia Carrier-745286 Element-745287	N/A Masked Processor Low Inertia	Solder Tabs	747047 (Short) 747048 (Long)	745911	Internal On Board	745288	13

FRENCH CANADIAN/SPANISH AMERICAN

CONTROL PCB TYPE	CONTROL PCB	MOTORS	SLAVE EPROM U201	TYPE OF CABLE CONNECTOR (J2 & J4)	CARRIER RIBBON CABLES	POWER SUPPLY HARNESS	WATCHDOG CIRCUITRY	INDEX MOTOR	REFERENCE BULLETINS
A Long	743305-FC 743307-SA	High Inertia Carrier-741273 Element-741274	729279 High Inertia	Post Headers	741399-(Short) 741400 (Long)	741509	External Watchdog PCB Needed	745285	12A 15
A Long	743318-FC	Low Inertia Carrier-745286 Element-745287	729293 Low Inertia	Post Headers	741399 (Short) 741400 (Long)	741509	External Watchdog PCB Needed	745285	12A 15
C Long	745414-FC 745416-SA	Low Inertia Carrier-745286 Element-745287	729293 Low Inertia	Post Headers	741399 (Short) 741400 (Long)	741509	Internal On Board	745285	14
C Long	747137-FC 747139-SA	Low Inertia Carrier-745286 Element-745287	729293 Low Inertia	Solder Tabs	747047 (Short) 747048 (Long)	741509	Internal On Board	745285	14

5LEA XE-5000 S/N 1142000 TO S/N 1211299
5LCA SE-100 S/N 1155300 TO S/N 1256299

US/ENGLISH CANADIAN

CONTROL PC BOARD TYPE	PART NUMBER	TYPE OF CABLE CONNECTOR (J2 & J4)	CARRIER RIBBON CABLES	POWER SUPPLY HARNESS	WATCHDOG CIRCUITRY	REFERENCE BULLETINS
A LONG	353605	POST HEADERS	741399 (SHORT) 741400 (LONG)	741509	EXTERNAL WATCHDOG PCB NEEDED	13, 14, 15
A LONG	353609	SOLDER TABS	747047 (SHORT) 747048 (LONG)	741509	EXTERNAL WATCHDOG PCB NEEDED	13, 14, 15
B SHORT	747113	SOLDER TABS	747047 (SHORT) 747048 (LONG)	745911	INTERNAL ON BOARD	13
C LONG	353607	SOLDER TABS	747047 (SHORT) 747048 (LONG)	741509	INTERNAL ON BOARD	14
D SHORT	749602	SOLDER TABS	747047 (SHORT) 747048 (LONG)	749598 (WIRES: 4 ORANGE 1 BLACK)	INTERNAL ON BOARD	35

Shaded areas indicate variations between one Control PC Board Type and the next.

5 SERIES DC SUPPLY PC BOARDS

MODEL GROUP	DC SUPPLY PC BOARD	SINGLE/ DOUBLE SIDED	J102 PIN CENTERS	BOARD OR HEAT SINK MOUNTS IN CASING BASE	POWER SUPPLY HARNESS	REFERENCE BULLETINS
5LCA, 5LCB, 5LCC, 5LCE, 5LEA, 5LKA, 5LWA, 5LWB	741656 (subs for 745898)	DOUBLE	.156" CENTERS	BOARD MOUNTS	741509 (W/TYPE "A" & "C" CONTROL PC BDS) 745911 (W/TYPE "B" CONTROL PC BD) 749598 (W/TYPE "D" CONTROL PC BD)	DC SUPPLY PC BOARDS: #45
(ORIGINAL VERSION)	364595	SINGLE	.100" CENTERS	BOARD MOUNTS	751047 (W/TYPE "C" CONTROL PC BD) 751046 (W/TYPE "D" CONTROL PC BD)	CONTROL PC BOARDS: #13, 14, 15, 16, 28A, & 35A
	*750021	SINGLE	.100" CENTERS	HEAT SINK MOUNTS	751047 (W/TYPE "C" CONTROL PC BD) 751046 (W/TYPE "D" CONTROL PC BD)	
5LCD, 5LCG, 5LCH, 5LED, 5LEE, 5LKB, 5LWC	749515	DOUBLE	.156" CENTERS	BOARD MOUNTS	741509	#48
	*750021	SINGLE	.100" CENTERS	HEAT SINK MOUNTS	751044	
5LCF, 5LCI, 5LEC, 5LEF	749520	DOUBLE	.156" CENTERS	HEAT SINK MOUNTS	741509 (.156" CENTERS ON CONTROL PC BD) 751044 (.100" CENTERS ON CONTROL PC BD)	#41
	*750021	SINGLE	.100" CENTERS	HEAT SINK MOUNTS	751045	

SHADED AREAS INDICATE VARIATIONS BETWEEN ONE DC SUPPLY PC BOARD AND THE NEXT FOR EACH MODEL GROUP

*NOTE: PC BOARD P/N 750021 MAY BE SUBSTITUTED BY P/N 751721

5 SERIES REPLACEMENT PC BOARD PART NUMBERS

THIS LIST PROVIDES A CROSS-REFERENCE FOR MANUFACTURER LABELS ON 5 SERIES PC BOARDS AND THE APPROPRIATE SERVICE STORES PART NUMBER FOR EACH LABEL.

PLEASE ORDER BOARDS BY SERVICE STORES PART NUMBER, NOT BY NUMBER ON LABEL.

LABEL NO. ON BOARD	SER. STORES PART NUMBER
353605	353605
353606	353606
353607	353607
353608	747113
353609	353609
353610	353605
353611	353605
353612	353607
353614	353614
353615	353614
353616	353616
353617	353616
353627	353614
353655	353614
353682	353683
353683	353683
353684	353614
353686	353614
353750	751740
353751	751560
353667	747113
364567	750021
364568	750021
364569	750021
364570	750021
364585	750021
364586	741656
364595	364595
364608	364608
364686	752050
741656	741656
743303	743303
743304	743303
743315	743316
743316	743316
745838	745839
745839	745839
745898	741656

LABEL NO. ON BOARD	SER. STORES PART NUMBER
746287	749515
747108	747109
747109	747109
747110	747109
747111	747109
747112	747113
747113	747113
747114	747113
747115	747113
747162	747165
747165	747165
748922	748922
748925	748922
748940	748922
748943	748922
748952	748922
748955	748922
748959	353614
748963	748922
748966	748922
749418	749424
749419	749424
749424	749424
749425	749424
749435	749436
749436	749436
749440	749439
749441	353683
749515	749515
749520	749520
749601	749602
749602	749602
749607	749602
749608	749602
750021	750021

LABEL NO. ON BOARD	SER. STORES PART NUMBER
751107	751108
751108	751108
751560	751560
751561	751560
751570	751570
751571	751570
751572	751572
751573	751572
751574	751574
751575	751574
751578	751570
751579	751570
751721	751721
751722	751721
751740	751740
751746	751746
752050	752050
752051	752050
752060	752060
752061	752060
752062	752062
752063	752062
752064	752064
752065	752064
752192	752192
752193	752192
752214	752214
752215	752214
752216	752216
752217	752216
752218	752218
752219	752218
752224	752214
752225	752214
752226	752216
752227	752216
752228	752218
752229	752218
752265	751721
752266	751721
752416	752417
752417	752417
752418	752419
752419	752419
752420	752421
752421	752421

LABEL NO. ON BOARD	SER. STORES PART NUMBER
760023	760023
760425	760023
760426	760023
760560	760565
760565	760565
760715	760565
760716	760716
770386	770400
770387	770400
770388	770400
770389	770400
770390	770400
770391	770400
770392	770400
770393	770400
770400	770400
770401	770400
770402	770400
770403	770400
770404	770400
770405	770400
770410	770400
770411	770400
770412	770400
770414	770414
770415	770414
770416	770414
770417	770417
771155	771155
771156	771156
771158	771158
771159	771155
771160	771156
771161	771161

LABEL NO. ON BOARD	SER. STORES PART NUMBER
780300	780300
780301	780301
780315	780315
780304	780300
780305	780301
780309	780300
780329	780315
781450	781450
781453	781450
781457	781457
781459	781457

LABEL NO. ON BOARD	SER. STORES PART NUMBER

SMITH CORONA

SERVICE BULLETI

TO: Technical Service & Training
Regional Service Managers
Service Locations
Canada and International
Electronic Servicing Dealers

NO: 9

PRODUCT:
PWP
PERSONAL WORD PROCESSOR

SUBJECT: DISK READ ERRORS

DATE: April 7, 1987

Some Personal Word Processor System 14's exhibit a "Disk Read Error" fault when recalling a file. This fault is attributed to electromagnetic interferance generated by the Monitor, which impairs function of the Disk Drive when the Disk Drive's upper and lower shields are not electrically effective.

To eliminate "Disk Read Errors," apply two pieces of Copper Conductive Tape, P/N 760770, to the seam between the upper and lower shields of the Disk Drive as follows:

PROCEDURE

1. Remove the PWP Module's Casing Top, and remove the Ground Terminal from top shield of Disk Drive. Disconnect Connectors P101 and P501 from CPU PC Board. Lift off the top shield, and remove the four Screws that attach the Disk Drive. Then remove Disk Drive, Paper Insulator, and Bottom Shield.

2. Clean the inside and outside surfaces of the vertical sides of the top and bottom shields with alcohol. Do not use cleaning solutions that contain silicone or other solutions that leave an insulating film. Do not touch vertical surfaces after cleaning.

3. Place the bottom shield on a flat surface with the open side facing up. Insert paper insulator and Disk Drive in bottom shield.

4. Place vertical sides of top shield inside of bottom shield (see illustration). Be sure top shield is all the way down against Disk Drive. Also, make sure front edges of top and bottom shields are even with each other.

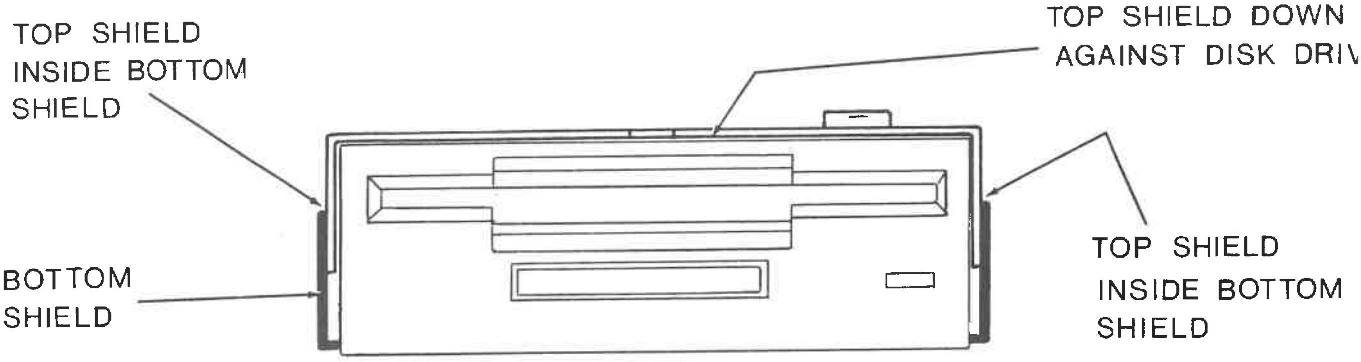

- OVER -

PROCEDURE (continued)

5. Peel backing paper from one piece of Copper Conductive Tape and apply it to the seam between the top and bottom shields, starting at the front edge and working rearward (see illustration). Match the top edge of tape with top edge of top shield.

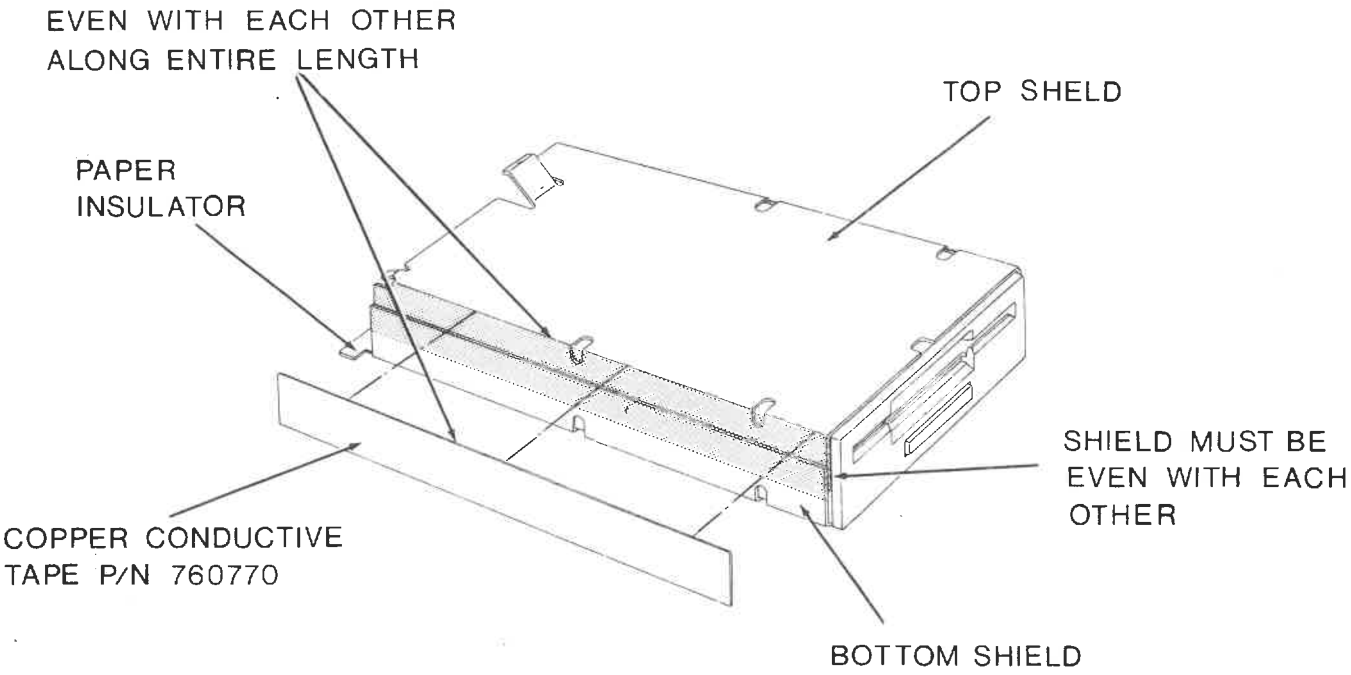

NOTE: Rub out any creases in Copper Tape and run your fingernail along the seam between top and bottom shields.

6. In a similar manner, apply the second piece of Copper Conductive Tape to opposite side of shield.

7. Reassemble Disk Drive to the PWP Module by reversing previous procedure. Be sure to connect the Ground Terminal to the top shield.

8. Power up PWP 14 and verify operation of Disk Drive by recalling text that is between 32K and 64K in length. No Disk Read Errors should occur.

PARTS INFORMATION

PART NUMBER	DESCRIPTION	QTY
760770	COPPER CONDUCTIVE TAPE	2

SMITH CORONA

5A SERIES MODELS

XL1500, XL2500
SL500, SL600
MARK VI, MARK XI

COMMITMENT TO EXCELLENCE
SMITH CORONA

SERVICE MANUAL

Printed in U.S.A. Form 3-0757
© Copyright 1988 by Smith Corona Corporation

PREFACE

This Manual provides service information for the following Smith Corona 5A Series Electronic Typewriters:

NON-DICTIONARY MODELS

MODEL PREFIX	MODEL NAME	COLOR(S)
5ACC	SL 500	SILVER FOG
5AEC	XL 1500	PLATINUM
5AKC	DEVILLE 450	SILVER FOG
5APC	CXL 4200	PLATINUM
5AWC	MARK VI	PLATINUM
5AGA	PREMIER 100	SILVER FOG

DICTIONARY MODELS

5ACD	SL 600	SILVER FOG
5AED	XL 2500	PLATINUM
5APD	CXL 4700	PLATINUM
5AWD	MARK XI	PLATINUM

The Manual is divided into sections that cover the different service areas required to service the machine. Thus, there is an Adjustment Section, Removals Section, etc. Refer to the Contents Page for a listing of subjects covered.

Except for the Specifications Sections, there is an Index of all information provided in each Section at the beginning of the Section.

Throughout the Manual, directional terms such as front, rear, top, bottom, left, right, etc., always refer to the machine as used by a typist. Consequently, "right" always refers to the Platen Knob side of the typewriter, regardless of the machine position necessary for checking a requirement or making an adjustment.

Satisfactory performance requires that all parts be properly adjusted and lubricated, and their movements be free of binds. Worn or broken parts should be replaced.

IMPORTANT

Some service procedures require working with static sensitive devices, such as the Printed Circuit Boards. Whenever a procedure involves one of these devices, the procedure is marked:

OBSERVE STATIC PRECAUTIONS

Read the reverse side of the Contents Page (Page ii) carefully for a full understanding of procedures to follow when working with static sensitive devices.

5A SERIES ELECTRONIC TYPEWRITERS SERVICE MANUAL

CONTENTS

SECTION	SUBJECT
1	SPECIFICATIONS
2	THEORY OF OPERATION
3	LUBRICATION & CLEANING
4	REMOVALS
5	ADJUSTMENTS
6	TROUBLESHOOTING
7	DIAGRAMS (NON-DICTIONARY MODELS)
8	DIAGRAMS (DICTIONARY MODELS)

SERVICE TOOLS

In addition to common service tools (screwdriver, pliers, volt/ohm-meters, etc.) normally required for typewriter service, the following tools are needed for servicing 5A Series Electronic Typewriters:

PART NUMBER	DESCRIPTION
250030	1/4" AND 3/16" OPEN END WRENCH
250036	1/4" NUT DRIVER
250065	#0 PHILLIPS SCREWDRIVER
250072	MTA WIRE INSERTER (.100" CENTERS)
250073	FEELER GAGE SET .0015"-.025"
250159	CARRIER CAPSTAN CABLE CLIP
250162	TORX T-10 SCREWDRIVER
250165	TORX T-8 SCREWDRIVER

STATIC ELECTRICITY

Static electricity in the service work area damages PC Boards. Smith Corona Typewriters and Word Processors are equipped with state of the art MOS IC's that are susceptible to damage by static electricity.

Damage can occur when handling or touching a PC Board or even when touching a connecting pin or wire that leads to the Board.

Static electricity is sometimes tough to identify. It takes about 10,000 volts of static electricity to feel a "zap" or see a spark. As little as 1000 volts can damage an IC. A person wearing synthetic soled shoes walking across a carpet in low humidity conditions can generate a charge of over 35,000 volts, enough to destroy all the MOS IC's on a PC Board.

RECOMMENDATIONS

Do not have carpeting in the service area or on the workbench. Use an anti-static floor sealant on floor surfaces, particularly on vinyl surfaces.

Connect metal workbenches to ground with a one Meg Ohm resistor cord. Use conductive anti-static work mats, or particle board or wood as a work surface.

Wear a wrist strap that is connected to ground through a one Meg Ohm resistor whenever working on a machine with the top cover off, and, of course, when handling a PC Board.

Do not allow synthetic fiber clothing (polyester, nylon, etc.) to contact machine components or the PC Board.

Do not slide a PC Board over any surface.

Keep the following static generators away from the work area:

Styrofoam (including coffee cups) -- Candy wrappers -- Cellophane

NOTE: The pink bag in which Boards from Service Stores' are shipped does not induce a static charge, but it also does not prevent a static charge from going through to the PC Board. Take static precautions when handling a bagged Board.

The following anti-static equipment is available from National Service Stores:

PART NUMBER	DESCRIPTION
250166	VELCRO ADJUSTABLE WRIST STRAP
250167	10 FOOT ONE MEG OHM COILED CORD
250168	ALLIGATOR CLIP (Used for connecting coiled cord (250167) directly to an available ground)
250096	CIRCUIT TESTER WITH GROUND JACK (Used for connecting coiled cord (250167) to a power outlet's ground. Particularly useful when no other ground point is available. Circuit Tester also checks for correct wiring and polarity).

SECTION 1

SPECIFICATIONS

POWER SUPPLY

POWER REQUIREMENTS:	117 VAC/60 HZ OR 220 VAC/50 HZ OR 240 VAC/50 HZ SEE ELECTRICAL RATING LABEL ON BOTTOM OF CASING BASE TO DETERMINE ELECTRICAL RATING OF MACHINE.
THERMAL PROTECTION:	130 C THERMAL CUTOUT IN TRANSFORMER.
TRANSFORMER OUTPUT:	24 VAC
APPROXIMATE POWER CONSUMPTION:	6.5 WATTS (Idle) 45 WATTS (Printing)

PRINTING/PAPER HANDLING

PRINTING TECHNIQUE:	Fully formed character Daisy Print Element.
CHARACTER SET:	96 printable characters on Print Element.
CHARACTER SPACING (PITCH):	10 CPI: .100" (2.5mm) per space. 12 CPI: .083" (2.2mm) per space.
TYPING LINE LENGTH:	9" (228.6mm) 10 Pitch: 90 Characters per line. 12 Pitch: 108 Characters per line.
PRINT SPEED:	10 Characters per Second (maximum).
PRINT DIRECTION:	Uni-directional (left to right).
MARGINS (10 PITCH):	Left Margin preset at space 12. Right Margin preset at space 72. Beep at Right Margin. Machine types through Margins after stopping or beeping at Margin.
TABS:	Up to 8 programmable tab settings.

PRINTING/PAPER HANDLING (continued)

RIBBON CASSETTE YIELD:

CORRECTABLE CARBON	MULTI-STRIKE
55,000 Characters	205,000 Characters

CORRECTION CASSETTE YIELD:

LIFT OFF (FOR CORRECTABLE)	COVER UP (FOR MULTI-STRIKE)
2700 Characters	1600 Characters

STEPPER MOTORS: 4 Phase, Bi-directional, Permanent Magnet Stepper Motors.

	CARRIER	ELEMENT	INDEX
Step Angle:	7.5°	7.5°	7.5°
Steps Per Revolution:	48	48	48
Resistance Per Phase:	36 OHMS	16 OHMS	50 OHMS
Run Voltage:	+18 VDC	+18 VDC	+18 VDC
Hold Voltage:	+5 VDC	NONE	NONE

PAPER FEED: Friction, Single Sheets or Forms.

LINESPACING:
1 (6 Lines per Inch).
1 1/2 (4 Lines per Inch).
2 (3 Lines per Inch).
1/2 for Super and Subscript.
Variable through Platen Knob.

MAXIMUM PAPER WIDTH: 12" (304.8mm).

PAPER CAPACITY: 1 original plus 2 copies.

KEYBOARD

44 Key Electronic Keyboard.

Rubber Contact Keyswitches with Coil Return Springs or Molded Dome Conductive Switches with Leaf Return Springs.

7 x 8 Electronic Keyboard Matrix.

Repeat Keys: All 44 Keys.

ELECTRONICS

MODELS WITHOUT SPELL-RIGHT:

Control PC Board with 8032 microcontroller. Integrated power supply on board supplies +5 VDC (Logic) and +18 VDC (Motors, Solenoids). 128 character current typing line correction memory. 10 character keyboard input buffer.

MODELS WITH SPELL-RIGHT:

Control PC Board with 8032 Master Microcontroller, 8052 Slave Microcontroller, and 1 Mb Master ROM for the Spell-Right Dictionary. Integrated Power Supply on Control PC Board supplies +5 VDC (Logic) and +18 VDC (Motors, Solenoids). 108 character current typing line correction buffer. 16 character Keyboard input buffer.

SELF TEST: Full character printout with correction at 5 cps. Refer to page 5-2 for full details.

PHYSICAL DIMENSIONS

HEIGHT:	4.6" (116.8mm)	WIDTH:	15.7" (398.8mm)
DEPTH:	12.9" (327.7mm)	NET WT:	12 lbs (5.5 Kg)

ENVIRONMENTAL CONDITIONS

OPERATING TEMPERATURES:	55° F to 100° F (13° C to 38° C)
OPERATING RELATIVE HUMIDITY:	10% to 80%
STORAGE TEMPERATURE:	-40° F to 160° F (-40° C to 71° C)
STORAGE RELATIVE HUMIDITY:	5% to 95%

SECTION 2

THEORY OF OPERATION

INDEX

	SUBJECT	PAGE
1A.	POWER SUPPLY (NON-DICTIONARY MODELS)	2-2
1B.	POWER SUPPLY (DICTIONARY MODELS)	2-2
2.	INITIALIZATION	2-3
3.	KEYBOARD	2-4
4A.	ELECTRONICS (NON-DICTIONARY MODELS)	2-5
4B.	ELECTRONICS (DICTIONARY MODELS)	2-6
5.	STEPPER MOTORS	2-7
6.	CARRIER DRIVE	2-8
7.	ELEMENT DRIVE	2-9
8.	PRINT HAMMER	2-9
9.	RIBBON CASSETTE FEED/CORRECTION CASSETTE LIFT & FEED	2-10
10.	RIBBON CASSETTE FEED MECHANISM	2-11
11.	CORRECTION CASSETTE LIFT & FEED MECHANISM	2-11
12.	RIGHT RIBBON SYSTEM TM	2-11
13.	PAPER FEED	2-12

THEORY OF OPERATION

1A) POWER SUPPLY (Non-Dictionary Models)

When the Typewriter's AC plug is inserted into an AC wall outlet, line voltage is applied to the primary and secondary windings of the transformer, and stepped down voltage (24 VAC) is applied to the Power Switch. When the Power switch is moved to the ON position, the (24 VAC) is applied to the input of the bridge rectifier (CR5).

The output of the bridge rectifier, applies filtered 24 VDC to the Source (S) of MOSFET Q1. Regulator U3 provides a switching input to the Gate (G) of Q1. With this input at the Gate, MOSFET Q1 provides a regulated square wave output at its Drain (D). The square wave output is applied to the input of an LC Circuit consisting of Coil L1 and Capacitor C7. This LC Circuit produces a regulated +18 VDC ± 5% output at the positive side of Capacitor C7.

The regulated +18 VDC is applied to Pins 1, 6, 7, and 8 of Regulator U4. With this input, U4 provides a regulated +5 VDC ± 5% output to the positive side of Capacitor C10.

The Control PC Board has a Watchdog Circuit that monitors correct voltage levels to the following components:

A) Hammer Solenoid
B) Ribbon Solenoid
C) Element Enable DEN
D) Carrier Phase CB
E) Carrier Hold CPS

If any of these components are left on, the Watchdog Circuit places a low on Pin 7 of U3 that is approximately 2 volts below the voltage at Pin 6. When this occurs, Regulator U3 shuts off. With U3 shut off, Q1 shuts down which effectively causes the +18 VDC to decrease below a level that allows Regulator U4 to operate. When the output of U4 drops low enough, all the functions of the Control PC Board shut down. This condition will last for approximately 2-4 seconds, and when cleared, complete reinitialization occurs. If the condition is not cleared, the Watchdog Circuit does not allow initialization to take place. The machine is inoperative.

1B) POWER SUPPLY (Dictionary Models)

When the typewriter's AC plug is inserted into an AC wall outlet, line voltage is applied to the primary and secondary windings of the transformer, and stepped down voltage (24 VAC) is applied to the Power Switch. When the Power Switch is moved to the ON position, the (24 VAC) is applied to the input of the bridge rectifier.

The output of the bridge rectifier, applies filtered 24 VDC to the Source (S) of MOSFET Q2. Regulator U4 provides a switching input to the Gate (G) of Q2. With this input at the Gate, MOSFET Q2 provides a regulated square wave output at its Drain (D). The square wave output is applied to the input of an LC Circuit consisting of Coil L1 and Capacitor C7. This LC Circuit produces a regulated +18 VDC ± 5% output at the positive side of Capacitor C7.

The regulated +18 VDC is applied to Pins 1, 6, 7, and 8 of Regulator U3. With this input, U3 provides a regulated +5 VDC ± 5% output to the positive side of Capacitor C10.

1B) POWER SUPPLY (Dictionary Models) (continued)

The Control PC Board has a Watchdog Circuit that monitors correct voltage levels to the following components:

A) Hammer Solenoid
B) Ribbon Solenoid
C) Element Enable DEN
D) Carrier Phase CB
E) Carrier Hold CPS

If any of these components are left on, the Watchdog Circuit places a low on Pin 7 of U4 that is approximately 2 volts below the voltage at Pin 6. When this occurs, Regulator U4 shuts off. With U4 shut off, Q2 shuts down which effectively causes the +18 VDC to decrease below a level that allows Regulator U3 to operate. When the output of U3 drops low enough, all the functions of the Control PC Board shut down. This condition will last for approximately 2-4 seconds, and when cleared, complete reinitialization occurs. If the condition is not cleared, the Watchdog Circuit does not allow initialization to take place. The machine is inoperative.

The AC or DC Power Supplies do not have a replaceable fuse. For safety there is a non-replaceable thermal cutout in the Line Transformer.

2) INITIALIZATION

The initialization sequence is described below. Briefly, the sequence is as follows:

A) When power is turned on, the Ribbon Solenoid quickly energizes to insure the Ribbon mechanism is in its proper starting position.

B) The Electronics moves the Carrier slightly to the right, to insure Carrier is not at the Left End Switch and then slightly to the left to insure the Carrier is not at the right end of the machine.

C) The Index Motor Shaft rotates 1/2 forward linespace and then 1/2 reverse linespace to establish a positive writing line.

D) Then, the Element Motor rotates quickly to snap the Element onto the Drive Disc, and stops.

E) The Carrier moves left until the Element Home Positioner closes the Left End Switch; quickly moves right to open the Switch; left to close the Switch again; and continues approximately .100" further before stopping.

NOTE: If a Right Ribbon Cassette is not placed in the Carrier or the wrong Ribbon Cassette is placed in the Carrier, the Carrier moves left until the Element Home Positioner closes the Left End Switch and the Carrier moves right to approximately space 8 or 9 and stops. The Shift Lock LED starts to flash and initialization stops. If the proper Ribbon Cassette is installed in the Carrier, the machine continues its normal initialization sequence.

2) INITIALIZATION (continued)

F) The Element rotates slowly counterclockwise until the Element Home Positioner drops into the Element Home Notch on the Rear Scissors Gear under Spring Tension, which opens the Left End Switch, and the Element stops rotating.

G) The Carrier moves right approximately .250" to establish position "0," and then continues to the preset left margin (Space 12). The default settings are 10 pitch, with Left Margin at 12, and Right Margin at 72.

The Left End Switch is also used as a Lid Switch. Whenever the Deck is raised, the Lid Switch Actuator closes the Left End Switch through Spring tension, and the Shift Lock LED flashes. When the Deck is closed, the Switch opens, and the Carrier reinitializes and relocates to its previous position.

NOTE: On Dictionary Models, the Carrier moves to position 45 and the Shift Lock LED flashes whenever the Deck is raised.

3) KEYBOARD

The Keyboard is composed of Keybuttons mounted in a plastic housing along with individual leaf-type springs, molded Dome Conductive Switches, a Flexible Circuit PC Board, and a metal plate. When a Keybutton is depressed, the Keybutton contacts the leaf-type spring which in turn pushes down on a Molded Dome Conductive Switch. The Conductive Switch then comes into contact with the 7 x 8 matrix Flexible Circuit PC Board which now completes a circuit between a specific Column and Row. This completed circuit is then read by the Electronics of the Control PC Board which determines what Key was depressed. Refer to the appropriate Diagrams Section for Keyboard Layout and Keyboard Matrix Chart.

A) KEY SCANNING

The Electronics sequentially pulses Keyboard Columns C0 through C6 (Non-Dictionary Models) and C6 through C0 (Dictionary Models) every 5ms. The Keyboard Matrix Rows R0 through R7 (Non-Dictionary Models) and R6, R5, R4, R0, R1, R2, R3, and R7 (Dictionary Models) are sequentially read by the Electronics.

When a Keybutton is depressed, the Molded Dome Switch closes a circuit in the Keyboard Matrix so that when a pulse appears in that Keybutton's "C" Column, the pulse also appears in the Keybutton's "R" Row. The Electronics determines which Keybutton was depressed by comparing which "C" Column was pulsed at the point in time that the "R" Row became active. If the same "C" Column and "R" Row activity is detected through two scanning cycles, the Electronics interprets this as a valid Keybutton depression and activates the circuits to perform the appropriate function.

When any Keybutton is held down, the Electronics delays 500ms after performing a function to verify that a repeat is desired, and then activates the circuits to continue performing that function until the Keybutton is released.

B) SHIFT LOCK LED

When the Shift Lock Keybutton is depressed, the Electronics recognizes the Key through the matrix as described above, and then energizes the LED. When either Shift Keybutton or Shift Lock Keybutton is subsequently depressed, the Electronics turns the LED off.

4A) ELECTRONICS (Non-Dictionary Models)

The Electronics consists of the components on the Control PC Board. The heart of the Control PC Board is Microcomputer U1. Its basic functions include the following:

A) Maintains control of the initialization process.

B) Determines and activates which Motors and Solenoids must be energized to perform the function, and when and for how long they must be energized.

C) Monitors Left End Switch/Lid Switch and Right Ribbon System Switch.

D) Sends the Keyboard Scanning pulses to the Keyboard, and interprets which Keybutton is depressed when a circuit is closed on the Keyboard.

E) Stores input characters in the Keyboard Input buffer and sends characters to the correction buffer.

F) Decides the type of function to perform, the upper or lower case character to be printed, the pitch selected for spacing, and (when required) the amount of vertical linespacing.

Other Major components on the Control PC Board include +5 & +18 VDC Power Supplies, Power Switch, other Integrated Circuits, and Country Selection Jumpers.

ELECTRONICS BLOCK DIAGRAM

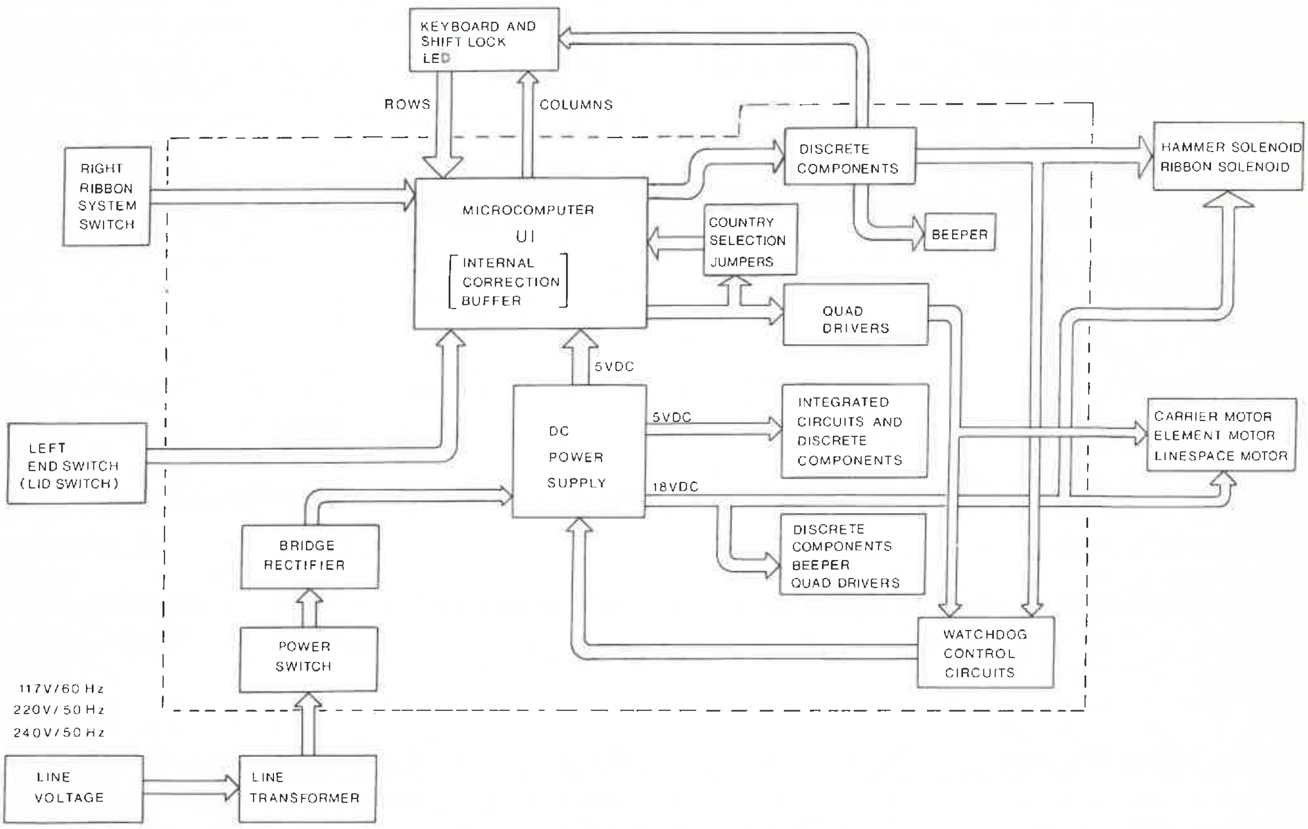

4B) ELECTRONICS (Dictionary Models)

The Electronics consists of the components on the Control PC Board. The heart of the Control PC Board consist of U1 Master Microcomputer, U2 Slave Microcomputer, and a One Meg Rom. Their basic functions include the following:

A) Maintains control of the initialization process.

B) Determines and activates which Motors and Solenoids must be energized to perform the function, and when and for how long they must be energized.

C) Monitors Left End Switch/Lid Switch and Right Ribbon System Switch.

D) Sends the Keyboard Scanning pulses to the Keyboard, and interprets which Keybutton is depressed when a circuit is closed on the Keyboard.

E) Stores input characters in the Keyboard Input buffer and stores characters in the correction buffer.

F) Decides the type of function to perform, the upper or lower case character to be printed, the pitch selected for spacing, and (when required) the amount of vertical linespacing.

G) Checks words as they are typed against the dictionary (within the One Meg ROM) for any misspellings. When a misspelling is detected, processes signals necessary for the functions of the dictionary.

Other Major components on the Control PC Board include +5 & +18 VDC Power Supplies, Power Switch, other Integrated Circuits, and Country Selection Jumpers.

ELECTRONIC BLOCK DIAGRAM

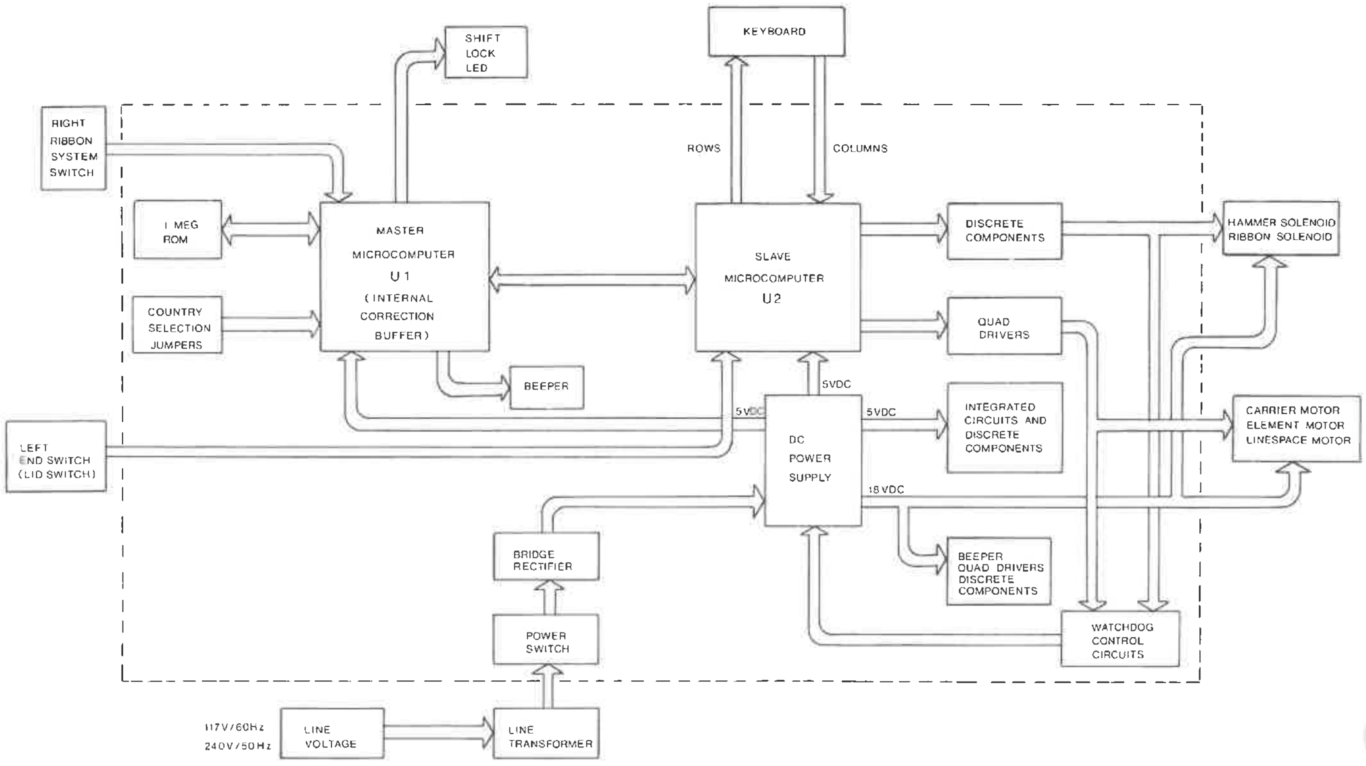

5) STEPPER MOTORS

There are three unipolar, four phase, Permanent Magnet Stepper Motors in the machine--the Index Carrier, and Element Motors.

A) CONSTRUCTION

Each Stepper Motor is made of a radially magnetized Rotor with alternating North and South Poles, and two Stator Sections, A and B.

The Stator Sections each have Bifilar coils wound around a plastic bobbin in the inside diameter of the Stator. When the two Stator Sections are assembled, the teeth of one section are aligned one half tooth away from similar teeth in the other section.

Opposite ends of the Bifilar coils are connected internally and brought out of the stator through a common lead wire. The other end of each coil can be switched to ground through the Electronics. Only one coil of each Bifilar pair is switched to ground at any given time. There are two Bifilar pairs in the stator. The windings in one pair are referred to as A and A′ , and the windings in the other pair are called B and B′ . The direction of current flow is the same in windings A and B, which is opposite to the direction of current flow in A′ and B′ . The current flowing through the coil creates lines of magnetic flux which charge the Stator Teeth as either North or South Poles. The Stator is constructed so that adjacent teeth are opposite poles when current is flowing through the coil. When current flows in the opposite direction, the polarity of the Stator Teeth changes to attract and repel the poles on the Rotor. Sequentially changing the direction of current flow rotates the Rotor through magnetic attraction and repulsion.

B) DRIVE STRATEGY

The three Stepper Motors make use of different Run, Settle, and Hold voltage levels during operation which are regulated by the Electronics. A run level voltage is applied to the active halves of the coils to produce a strong magnetic field during operation. A settle level voltage is used as a transition voltage when one half of a coil is switched off and the other half switched on. The Carrier Motor also makes use of a third voltage level (Holding Voltage), when stationary, to keep the Carrier stable for printing. The Holding Voltage is drawn off the +18 VDC, and stays between +4 to +5 VDC.

OPERATING VOLTAGES

MOTOR	RUN VOLTAGE	SETTLE VOLTAGE	HOLDING VOLTAGE
Carrier	+18 VDC	+18 VDC	+5 VDC
Element	+18 VDC	+18 VDC	None
Index	+18 VDC	+18 VDC	None

As the Motor Phases change the lines of magnetic flux, the Permanent Magnet Rotor rotates through magnetic attraction and repulsion. The Electronics reverses the phase sequence for reverse Rotor rotation.

NOTE: The terms "Phase 1," "Phase 2," etc., are used for description purposes only. The actual starting phase for any motor move is dependent upon where the motor stopped in its previous move, and on the programming in the Electronics. All subsequent motor steps follow the normal sequence. The starting phase for the Carrier Motor is dependent upon the pitch selected and the Left End Switch Adjustment.

5) STEPPER MOTORS (continued)

C) STEP ANGLES

The Stator Teeth and magnetic Rotor Poles of each motor are arranged so that each successive Phase that is energized rotates the Rotor the same number of degrees. The step angle for all Motors is 7.5°, which means there are 48 full steps per revolution. The number of phases that are energized to perform any particular function is dependent on the nature of the function.

STEPPER MOTOR TIMING CHART

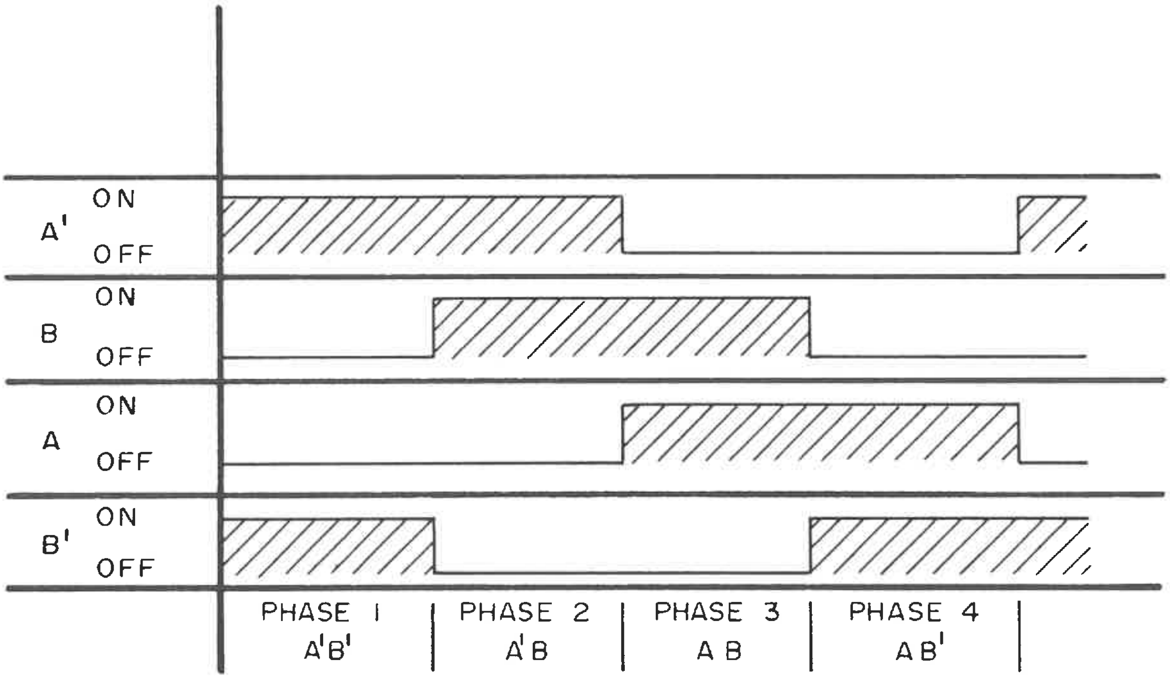

6) CARRIER DRIVE

The Carrier Motor is mounted on the rear of the Carrier Molding. Driven by the Electronics, the Carrier Motor rotates clockwise and counterclockwise to move the Carrier left and right along the Carrier Rails for printing, correction, and spacing functions.

There is a 16 tooth Drive Gear permanently attached to the Carrier Motor Rotor Shaft. This Gear is in mesh with a 40 tooth, two piece Scissors Gear. The two halves of the Scissors Gear are held in mesh with the Drive Gear under tension of a Spring assembled between the two halves. This Spring tension eliminates all Gear backlash, which provides improved Gear wear.

6) CARRIER DRIVE (continued)

The forward half of the Carrier Scissors Gear is part of the Carrier Drive Capstan. The Carrier Drive Cable is wound around the Capstan, and anchored in the left and right Carrier Module Frames. When the Carrier Motor rotates clockwise or counterclockwise, the Capstan rotates to move the Carrier left or right along the Carrier Drive Cable.

7) ELEMENT DRIVE

The Element Motor is mounted on the rear of the Carrier Molding. Driven by the Electronics, the Element Motor rotates clockwise and counterclockwise to place the desired character on the Print Element in line with the Hammer for printing and correction.

There is a 48 tooth Drive Gear permanently attached to the Element Rotor Shaft. This Drive Gear is in mesh with a 96 tooth, two piece Element Scissors Gear. The front half of the Element Scissors Gear is pressed onto the Element Drive Shaft, so that when the Element Motor rotates clockwise and counterclockwise the Element Drive Disc rotates also.

The Element Home Positioner and Positioner Actuator are mounted on the rear of the Element Motor Mounting Plate. During initialization, the Positioner Actuator contacts a Stud on the Left Frame, and pivots the Home Positioner so that the Positioner Tooth contacts the ridge on the Rear Scissors Gear. When the Element Motor rotates counterclockwise, the Positioner Tooth drops into the Notch in the Gear Ridge to stop the Element at Home Position.

The Element Drive Disc has two rectangular holes and one round hole which are keyed to fit the Print Element. When a Print Element is inserted, and the Hammer Assembly is pivoted rearward against the Element, the Element Pusher (mounted in the Hammer Solenoid Bracket) pushes the Element against the Drive Disc. During initialization, the Element rotates quickly clockwise to snap the Element onto the keyed holes in the Element Drive Disc under tension of the Element Pusher. The keyed holes assure that the Home Character (e) is at Print Position when the Positioner Tooth is engaged in the Notch on the Rear Scissors Gear.

Element Home Position is established during initialization. If a new Print Element is inserted after initialization, opening and closing the Lid reinitializes the machine to reestablish Home position.

The Electronics is programmed to select the shortest distance to the next printable character on the Element whether printing from the Buffer or starting at Home Position.

8) PRINT HAMMER

The Print Hammer is pivotally attached to the Hammer Assembly Bracket, and rests on the Hammer Solenoid Plunger under spring tension. When the Electronics energizes the Hammer Solenoid for printing, the Solenoid Plunger moves upward to pivot the Hammer top rearward to strike the Print Element Petal in its path against the Platen. When the Hammer Solenoid is de-energized, the Hammer returns to rest under spring tension.

The Electronics is programmed to energize the Hammer Solenoid for longer or shorter periods of time to provide stronger or weaker impression for individual characters. For broad faced characters (W, M, etc.), the Electronics energizes the Solenoid for a longer period of time than for small faced characters (., _, etc.). There are various time periods programmed in the Electronics to provide equal impression among all characters in both 10 and 12 pitch.

9) RIBBON CASSETTE FEED/CORRECTION CASSETTE LIFT & FEED

The Ribbon Cassette Feed and Correction Cassette Lift & Feed are both driven by the same mechanism. This mechanism has one Solenoid which is energized every Ribbon Cassette or Correction Cassette cycle. A latching system, controlled by the energizing of the Print Hammer Solenoid, triggers either a Ribbon Cassette Feed or a Correction Cassette Lift and Feed. The normal position of this latch mechanism is Correction Cassette Lift and Feed.

The Electronics determines from the Keybutton depressed whether the feed should be Ribbon Cassette or Correction Cassette. A brief sequence for each action follows:

A) RIBBON CASSETTE - the Element rotates to the selected character; the Hammer fires to print the character and trip the Ribbon mechanism for a Ribbon Cassette Feed; the Ribbon Solenoid energizes to feed the Ribbon Cassette; the Carrier moves right one space (see Print Cycle Chart below).

NOTES: 1) When the Ribbon Solenoid is de-energized, the Ribbon mechanism returns to the Correction Cassette Lift and Feed position.
2) The Ribbon advance during a Ribbon Cassette cycle is for the next printable character.

B) CORRECTION CASSETTE LIFT & FEED - the Carrier moves left or right to the character location; the Element rotates to the selected character; the Ribbon Solenoid energizes to lift the Correction Cassette Ribbon, and advance the Take-up Feed Pawl; and the Hammer fires to transfer the character to the Correction Ribbon. The Ribbon Solenoid de-energizes, allowing the Correction Bail to drop to its normal position which feeds the Correction Ribbon and returns the Ribbon mechanism to the Correction Cassette Lift and Feed position.

PRINT CYCLE - SINGLE CHARACTER (10 PITCH)

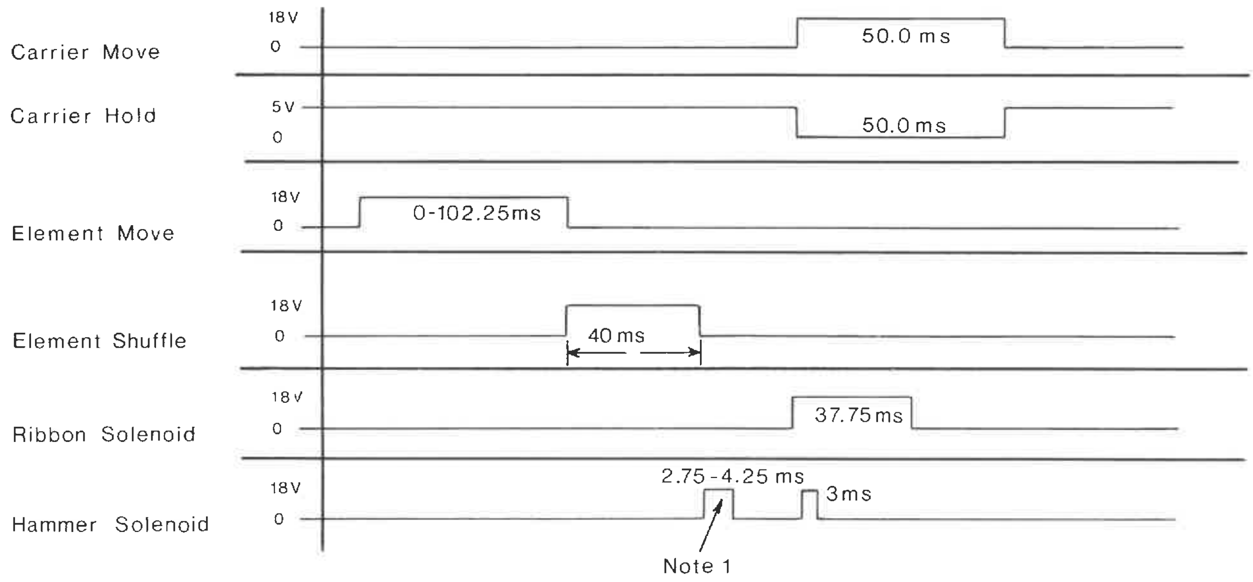

NOTE 1:
LENGTH OF PULSE VARIES
WITH THE PITCH SELECTED
AND HAMMER ENERGY LEVEL.

10) RIBBON CASSETTE FEED MECHANISM

When latched for Ribbon Cassette feed, the Ribbon Cassette Feed mechanism feeds Ribbon when the Ribbon Solenoid is energized. The top of the Ribbon Driver seats in the Drive Gear in the Ribbon Cassette. The bottom of the Ribbon Driver seats into the Ribbon Ratchet Hub which in turn fits over the Ribbon Feed Shaft. On the bottom of Ribbon Feed Shaft is an Anti Backup Feed Spring which allows the Feed Shaft to rotate only in one direction.

After printing the previous character, the Ribbon Solenoid energizes and pulls the pawl of the Ribbon Feed Assembly in the teeth of the Ribbon Drive Ratchet Hub. This action rotates the Ribbon Feed Shaft, which rotates the Ribbon Driver approximately 30° for each printable character. The Ribbon Cassette is now positioned for the next printable character.

11) CORRECTION CASSETTE LIFT & FEED MECHANISM

When the Ribbon mechanism is in its normal position, it is ready for a Correction Cassette Lift and Feed cycle. As the Ribbon Solenoid plunger is pulled into the Solenoid, the bottom of the Correction Bellcrank is pulled forward, moving the top tail upward, which causes the Correction Bail to lift upward. As the Bail raises, the Correction Ribbon Feed Pawl ratchets over approximately five teeth of the Take-up Ribbon Hub Ratchet. When the Ribbon Solenoid Plunger is released, spring tension on the Bail returns all parts to rest. As the Bail lowers, the Feed Pawl advances approximately five teeth of the Take-up Ribbon Hub Ratchet to rotate the Supply Feed Ribbon Hub Ratchet approximately five teeth past the Holding Pawl to feed the Correction Ribbon by one character position.

12) RIGHT RIBBON SYSTEM ™

The purpose of the Right Ribbon System is to alert you of an attempt to install a mismatched set of Ribbon and Correction Cassettes. For example: "Correctable" Film Ribbon with "Cover-Up" Correction Cassette is a mismatch. If a mismatched set is inserted, the Ribbon Cassette will not fit properly into the typewriter. Also, the Shift Lock LED flashes when the Deck of the typewriter is closed.

The Right Ribbon System allows the typewriter to operate with a Ribbon Cassette only, but not with a Correction Cassette only.

The Right Ribbon System consists of a Right Ribbon Switch, Correction Cassette mechanism, Keyed Correction Cassette, and Keyed Ribbon Cassette. When the proper match between the Correction and Ribbon Cassettes exist, the Right Ribbon Switch is actuated (opened) by a tab on the Ribbon Cassette. With the Switch actuated, the Electronics on the Control PC Board is satisfied that a proper match exist between print and Correction Ribbons and allows the typewriter to function.

13) PAPER FEED

Driven by the Electronics, the Index Motor rotates clockwise and counter-clockwise to drive the Platen for Paper Feed.

On the Index Motor is a 12 tooth Drive Gear that is permanently attached to the Index Motor Rotor Shaft. This Gear is in mesh with a Pinion Face Gear. The Pinion Face Gear has a smaller gear that meshes with a large gear of the Linespace Pinion Assembly. The Linespace Pinion Assembly has a small gear that is in mesh with the Gear surface of the Platen Knob Assembly. The Platen Knob is mechanically attached to the Platen. This series of gears provide the correct gear speed and torque to provide proper rotation of the platen.

When the Carrier Return Keybutton or Code function is depressed, the Electronics energizes the Index Motor to rotate the Platen the number of linespaces as determined by the operator's linespace selection (1, 1 1/2, or 2).

The Paper Release Lever holds the Paper Table so that Front and Rear Feed Rollers are against the bottom of the Platen to provide Paper Feed through friction when the Platen rotates. When the Paper Release Lever is pulled forward, the Paper Table drops slightly to remove the Feed Roller tension, which allows the operator to straighten a sheet of paper before printing.

SECTION 3

LUBRICATION & CLEANING

INDEX

SUBJECT	PAGE
GENERAL LUBRICATION PROCEDURE	3-1
CLEANING PROCEDURES	3-2
LUBRICATION POINTS	3-3

GENERAL LUBRICATION PROCEDURE

The main illustration points for Electronic Typewriters are illustrated and listed beginning on page 3-3. Each lubrication point is indicated with an arrow and a circled reference number indicates the lubricant used at that point. The following lubricants are required:

REFERENCE NUMBER	DESCRIPTION	PART NUMBER
1	Dow #200 Silicone	250254
2	VW-1222 Grease	250299
3	Mobil FM2 Grease	250500
4	Anderol 465	250289
5	Dow #111 Silicone	250290
6	Never-Seez Grease	250293
7	NYOGEL	250262

IMPORTANT: The Control PC Board and Transformer should be kept free of dirt, grease, and oil.

CLEANING PROCEDURES

Cleaning procedures for machine parts and recommended cleaning solutions are outlined below.

DO NOT, under any circumstances, use an air hose or chemical cleaner to clean an Electronic Typewriter. Debris and chemical residue can impair the function of electrical components. If an internal part requires cleaning, wipe that part clean with clean, dry cloth.

CAUTION: WHEN CLEANING WITH RECOMMENDED CLEANING SOLUTIONS, TAKE CARE THAT NO LIQUID DRIPS OR SPLASHES ONTO INTERNAL PARTS. KEEP ALL SOLVENTS AND PETROLEUM DISTILLATES AWAY FROM ELECTRICAL COMPONENTS.

PLATEN

Remove Platen (see Removals). Soak a clean cloth with rubbing alcohol, and wipe the Platen surface to remove dust, dirt, and ink.

NOTE: If the Platen is not removed, do not use alcohol: use a household cleaner such as Windex.

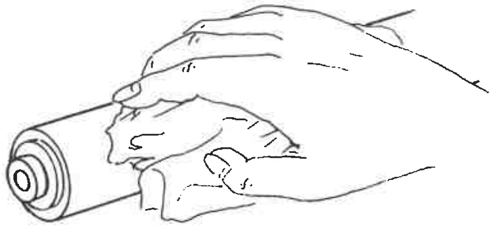

PRINT ELEMENT

Dip the Print Element Petals into a container of rubbing alcohol, and wipe dry with a clean cloth.

DO NOT soak the Print Element in the alcohol.

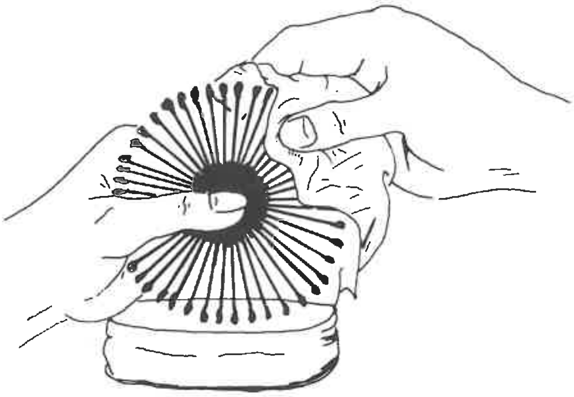

JACKETS

Remove Jackets and wipe clean with a sponge soaked in a mild ammonia or soap solution.

DO NOT use any cleaning solutions which contain chlorinated compounds.

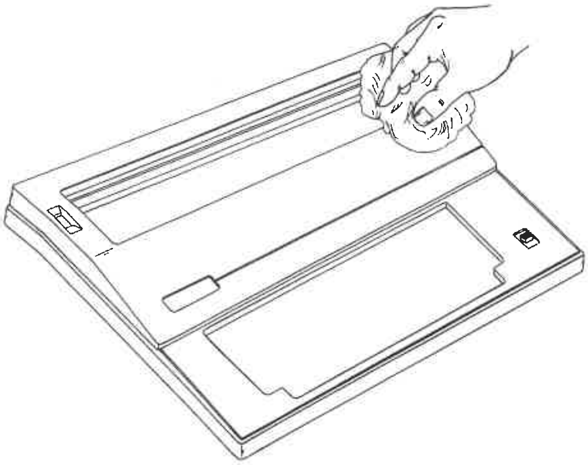

LUBRICATION POINTS

CARRIER RAILS

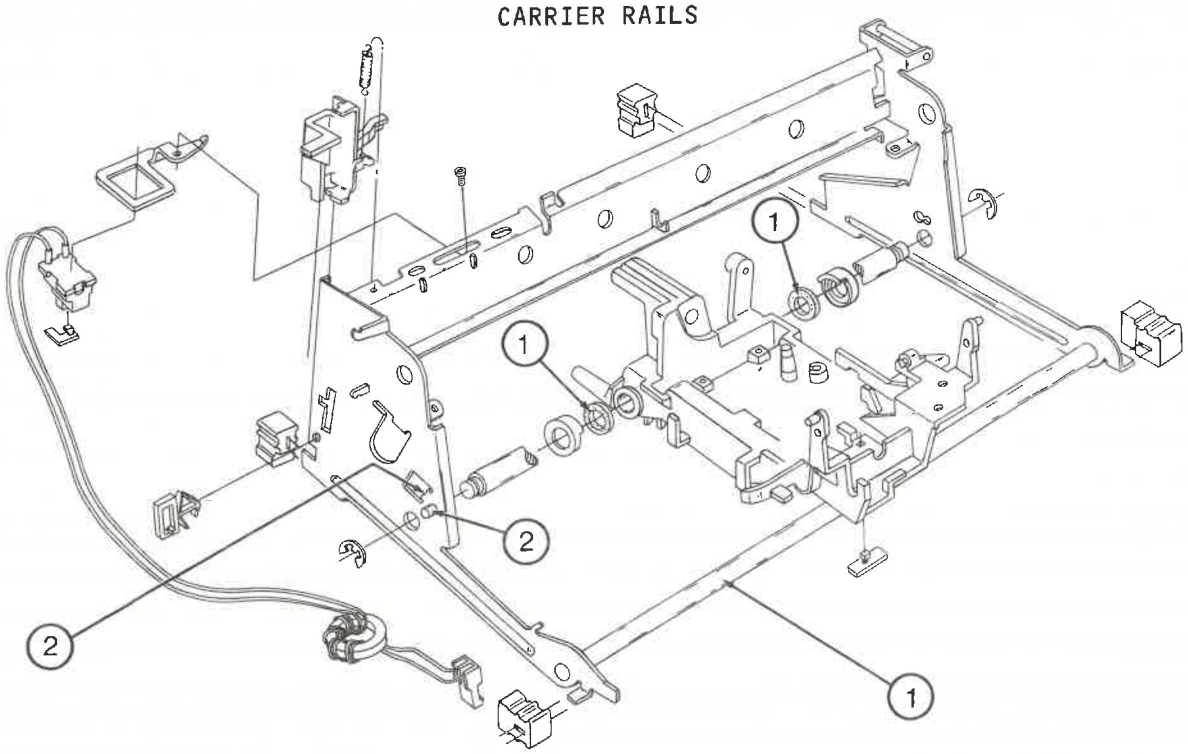

CARRIER DRIVE

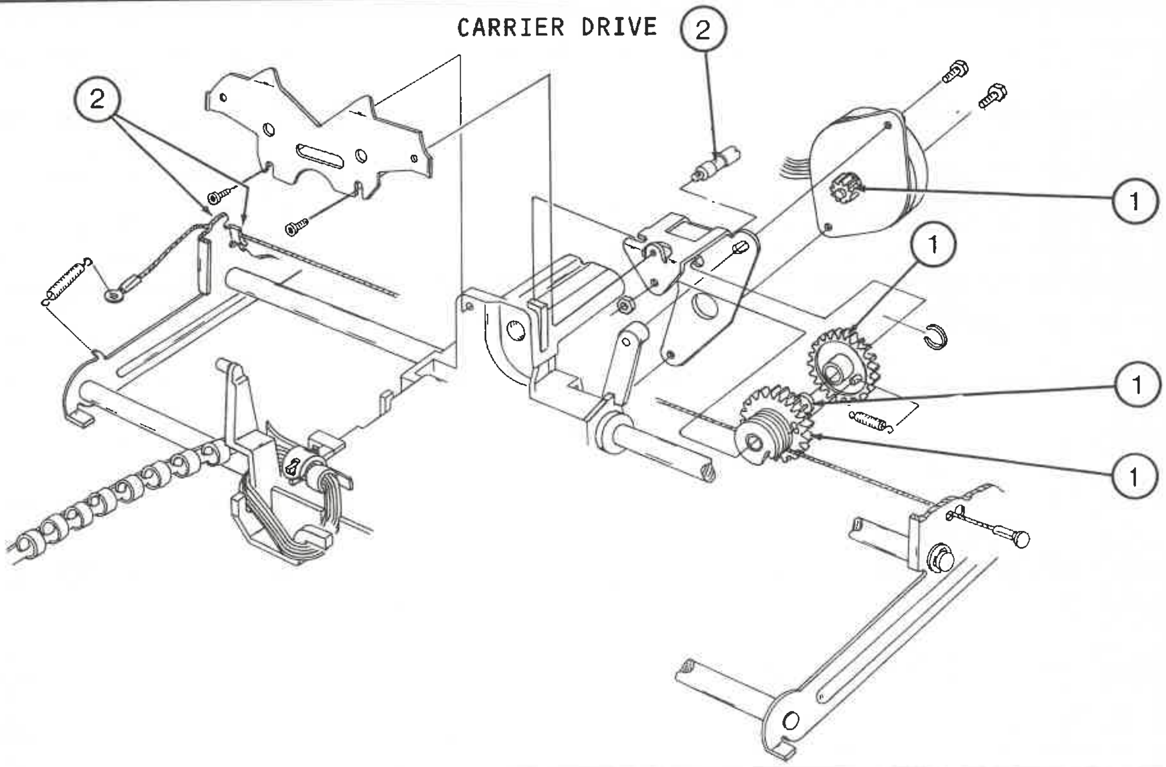

REF	DESCRIPTION	REF	DESCRIPTION
1	Dow #200 Silicone	4	Anderol 465
2	VW-1222 Grease	5	Dow #111 Silicone
3	Mobil FM2 Grease	6	Never-Seez Grease
		7	Nyogel

LUBRICATION POINTS

ELEMENT DRIVE

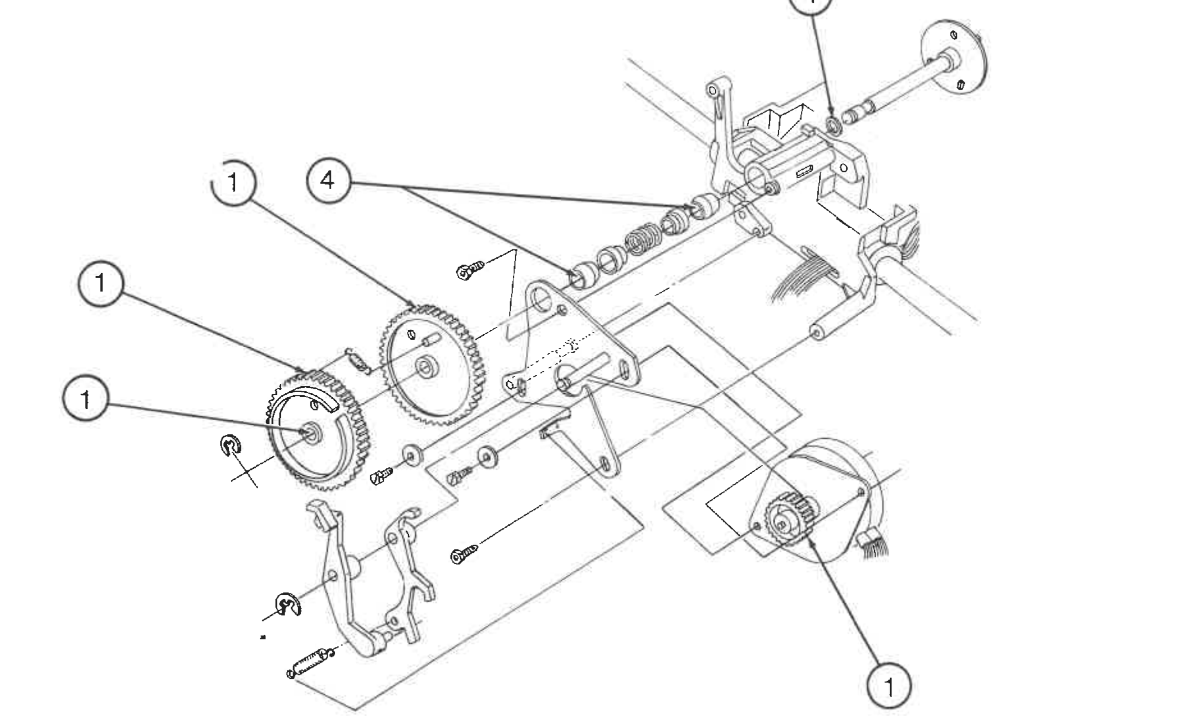

PAPER FEED

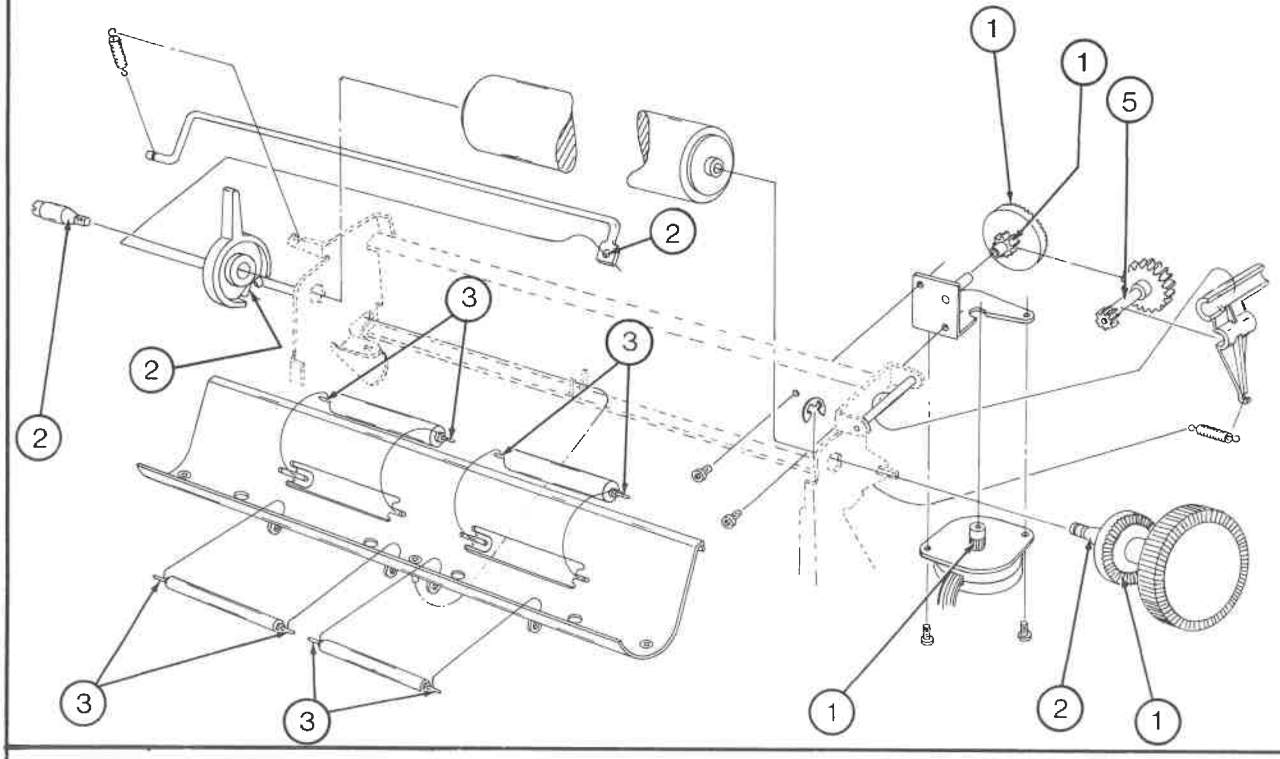

REF	DESCRIPTION	REF	DESCRIPTION
1	Dow #200 Silicone	4	Anderol 465
2	VW-1222 Grease	5	Dow #111 Silicone
3	Mobil FM2 Grease	6	Never-Seez Grease
		7	Nyogel

LUBRICATION POINTS

RIBBON DRIVE

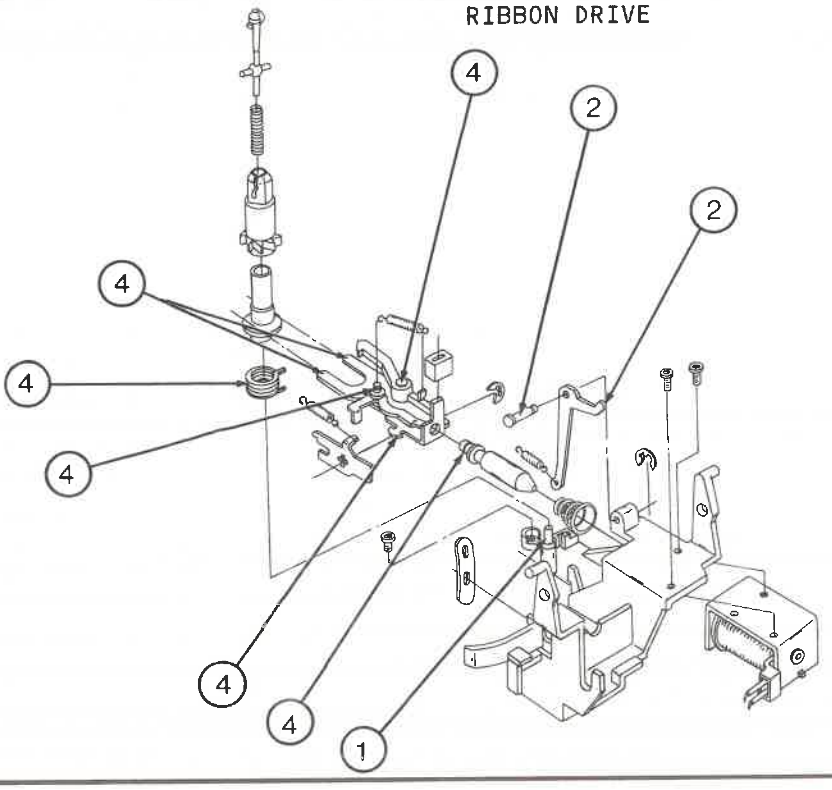

HAMMER

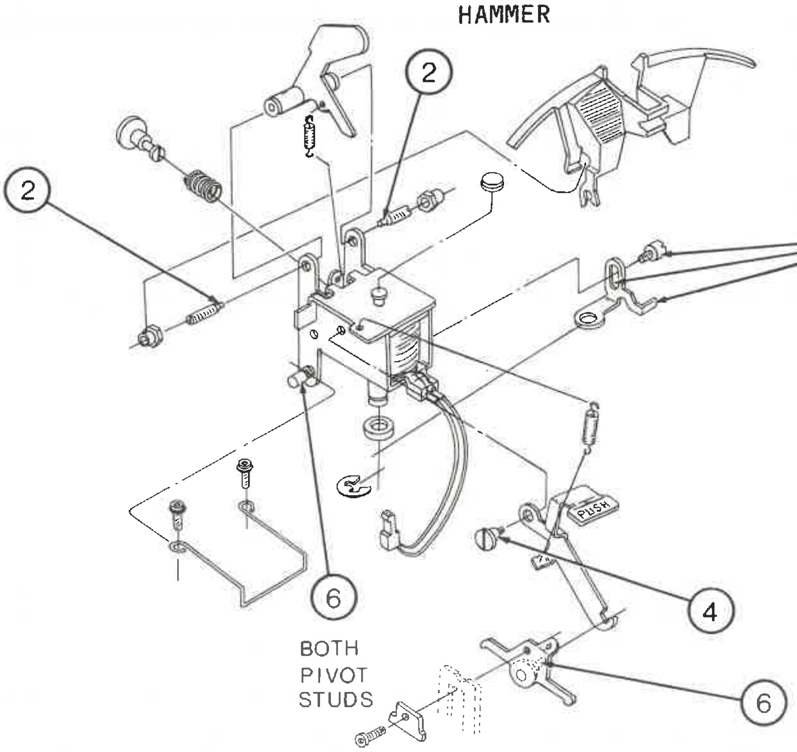

REF	DESCRIPTION	REF	DESCRIPTION
1	Dow #200 Silicone	4	Anderol 465
2	VW-1222 Grease	5	Dow #111 Silicone
3	Mobil FM2 Grease	6	Never-Seez Grease
		7	Nyogel

LUBRICATION POINTS

KEYBOARD TYPE "B"

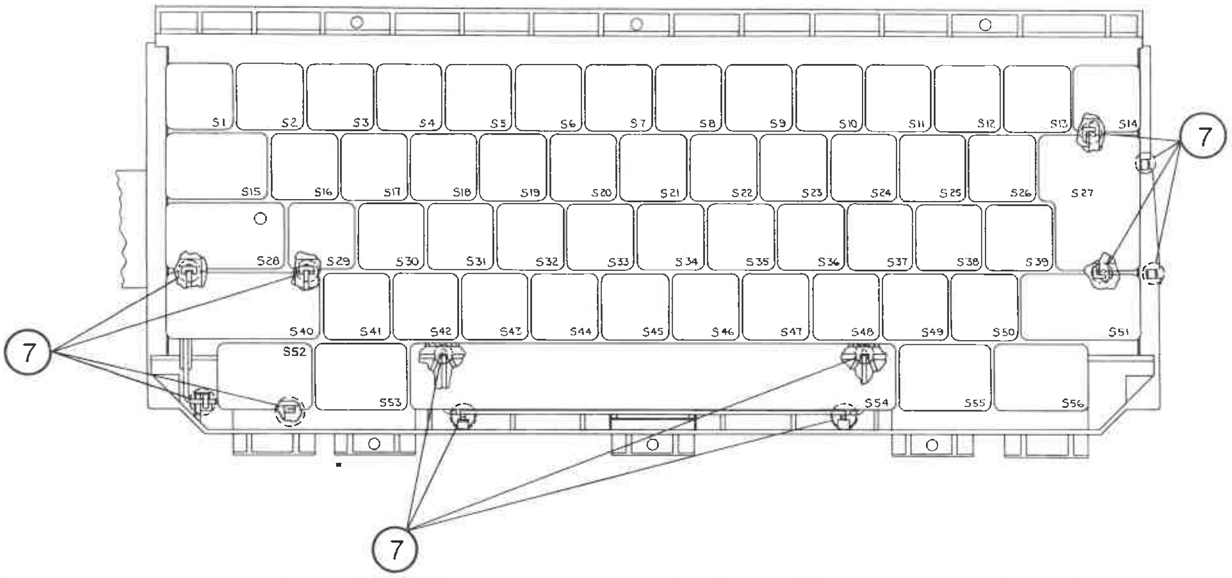

REF	DESCRIPTION	REF	DESCRIPTION
1	Dow #200 Silicone	4	Anderol 465
2	VW-1222 Grease	5	Dow #111 Silicone
3	Mobil FM2 Grease	6	Never-Seez Grease
		7	Nyogel

SECTION 4

REMOVALS

GENERAL PROCEDURE

All removals should be performed with power cord unplugged and machine at rest.

Prior removal of particular groups of parts is indicated in each removal procedure as required.

Adjustments broken during a removal are indicated at the bottom of each procedure, and are referenced to adjustment numbers in the Adjustment Section. Refer to the Branch Display on page 5-1 for sequential relationships among adjustments.

OBSERVE STATIC PRECAUTIONS

Removals of PC Boards and other static sensitive parts are marked as above. Be extremely careful when handling these parts as static electricity can cause irreparable damage to static sensitive devices. Refer to the reverse side of the Contents Page (page ii) for proper procedures to follow when handling static sensitive devices.

REMOVALS INDEX

1. Jacket Removal ---------- 4-2
2. Keyboard Removal ---------- 4-2
3A. Original Keyboard Keyswitch Plunger & Shift LED Removal ---------- 4-3
3B. Type "B" Keyboard Component Removals ---------- 4-3 thru 4-5
4. Control PC Board Removal ---------- 4-6
5. Frame Assembly Removal (with Carrier & Paper Handling) ---------- 4-6
6. Transformer Assembly Removal ---------- 4-7
7. Correction Bail Removal ---------- 4-7
8. Correction/Cassette Ribbon Solenoid Removal ---------- 4-8
9. Linespace Motor Removal ---------- 4-8
10. Ribbon Mechanism Removal ---------- 4-9
11. Hammer Solenoid Assembly Removal ---------- 4-10
12. Element Motor Removal ---------- 4-11
13. Element Drive Shaft and Bearings Removal ---------- 4-12
14. Platen and Paper Table Removal ---------- 4-13
15. Carrier Molding Removal ---------- 4-13
16. Carrier Motor and Carrier Capstan/Cable Assembly Removal ---------- 4-14 & 4-15

1. JACKET REMOVAL

1) Remove four SCREWS (2) and lift off MASK (3).

NOTE: DECK (1) can be snapped off Mask if required.

2) Remove Keyboard, Control PC Board, Frames, and Transformer Assembly (see Removals Index) to remove CASING BASE (4).

REPLACEMENT:

Reverse procedure.

ADJUSTMENTS BROKEN:

None.

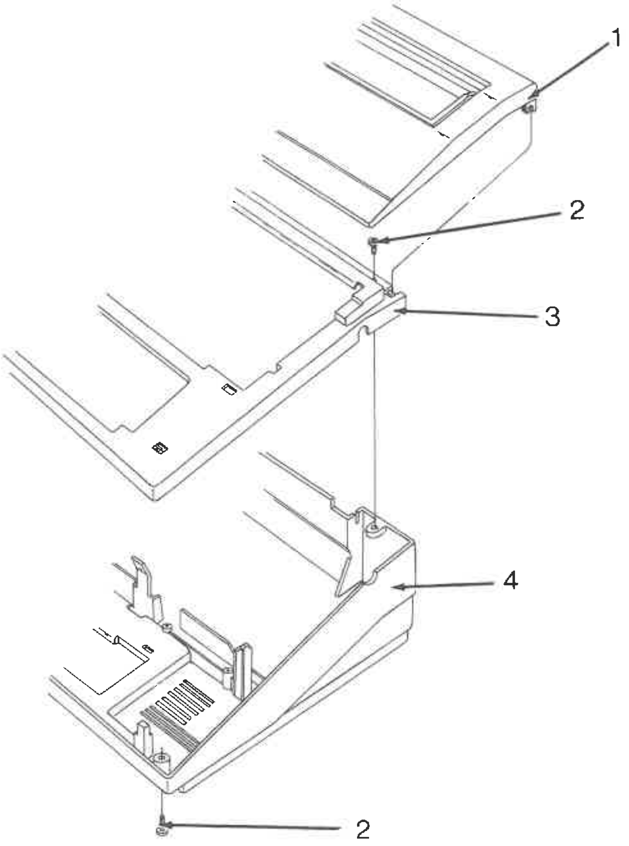

2. ORIGINAL KEYBOARD REMOVAL

1) Remove Casing Top (see Jacket Removal).

2) Unsnap both rear corners of KEYBOARD (5) from Left and Right POSTS (4-A).

3) Lift Rear of KEYBOARD (5) up and slide Keyboard rearward from front POSTS (4-B). Disconnect the Ground CABLE (5-A) from Keyboard and disconnect the Keyboard Connector from CONTROL PC BOARD (6). Remove Keyboard.

REPLACEMENT: Reverse procedure.

ADJUSTMENTS BROKEN: None.

OBSERVE STATIC PRECAUTIONS

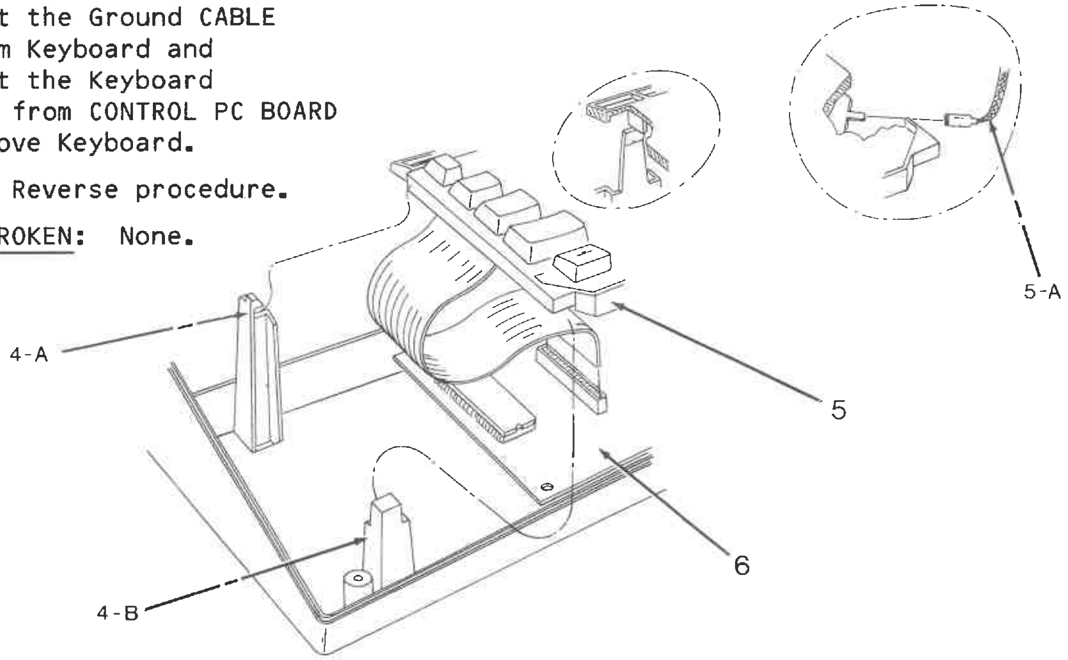

3A. ORIGINAL KEYBOARD KEYSWITCH PLUNGER AND SHIFT LED REMOVAL

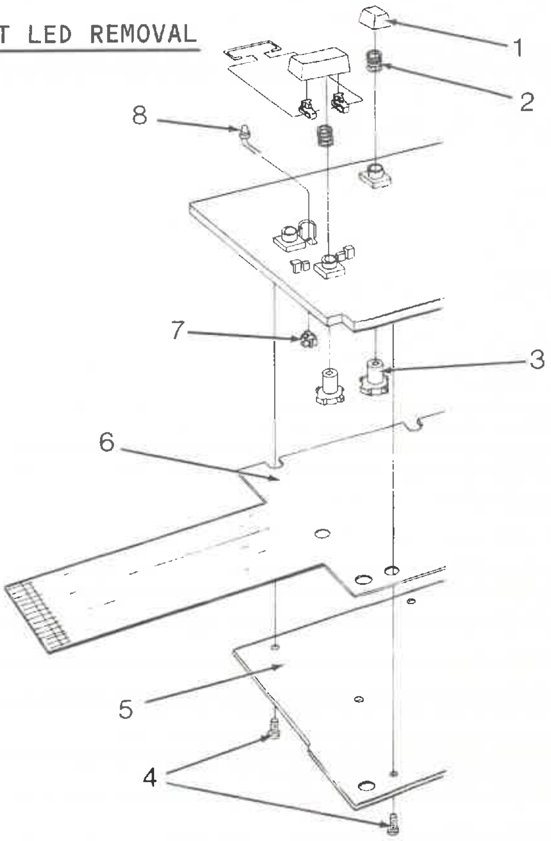

1) Remove Casing Top and Keyboard (see Removals Index).

2) With Keyboard upside down (Keybuttons facing down), remove SCREWS (4) and lift off Keyboard METAL PLATE (5).

3) Lift off Keyboard FLEXIBLE PC BOARD (6).

4) To remove KEYSWITCH PLUNGER (3), remove KEYBUTTON (1) and SPRING (2) from the top of Keyboard, and KEYSWITCH PLUNGER (3) from the bottom of Keyboard.

5) To remove SHIFT LED (8), remove LED PLUNGER (7) from bottom of Keyboard and then lift out SHIFT LED (8) from the top of Keyboard.

REPLACEMENT: Reverse procedure.

ADJUSTMENTS BROKEN: None.

3B. TYPE "B" KEYBOARD COMPONENT REMOVALS

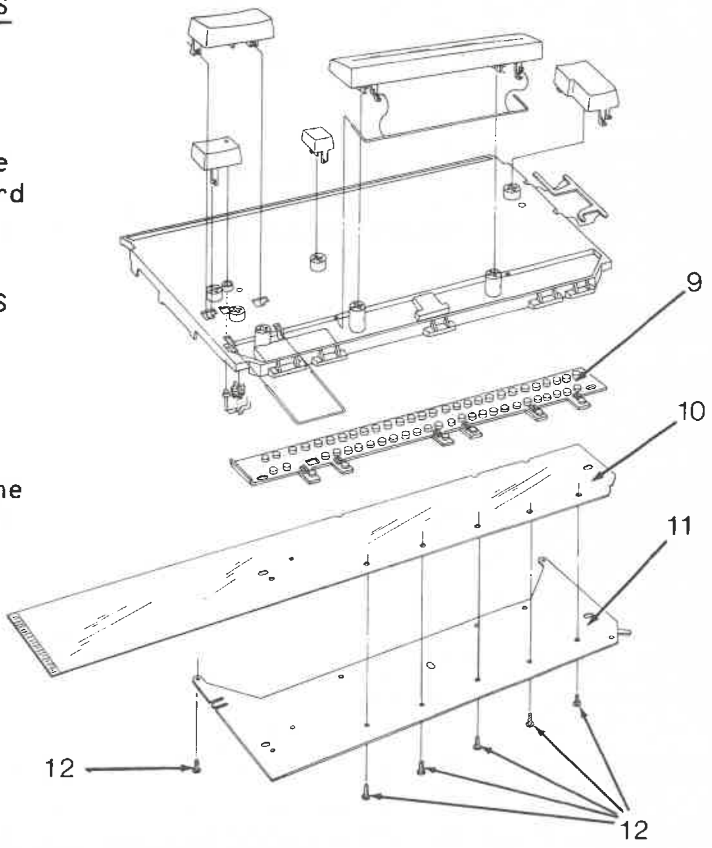

1) Remove Casing Top and Keyboard (see Removals Index).

2) With Keyboard upside down (Keybuttons facing down), remove SCREWS (12) and lift off Keyboard METAL PLATE (11).

3) Lift off Keyboard FLEXIBLE CIRCUIT (10) and MOLDED SWITCHES (9) from Keyboard.

4) Keybutton Removals:

The Keybuttons on the Type "B" Keyboard cannot be removed by prying up the Keybutton as on the original design Keyboard. See the following procedure.

PRYING UP ON A TYPE "B" KEYBUTTON DAMAGES THE STRIKER SPRING.

IF A STRIKER SPRING GETS DAMAGED, THE ENTIRE KEYBOARD MUST BE REPLACED.

PRYING UP ON A TYPE "B" KEYBUTTON DAMAGES THE STRIKER SPRING.
IF A STRIKER SPRING GETS DAMAGED, THE ENTIRE KEYBOARD MUST BE REPLACED.

3B. TYPE "B" KEYBOARD KEYBUTTON REMOVALS (cont.)

A. Remove the Keyboard from the Casing Base. Removal of the Keyboard Base Plate is not necessary, but the illustrations in this procedure show it removed.

B. When removing the Spacebar, Left Shift, or Return Keybutton, remove the Keybutton Bail next:

1) For the Spacebar or Shift Keybutton, use a Spring Hook on the Wire Bail, and pull forward to disengage the Bail from the Keyboard and Keybutton.

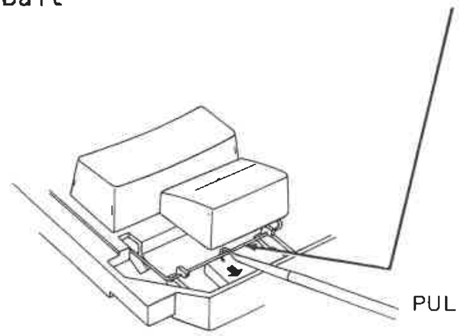

2) For the Return Keybutton, depress the Keybutton slightly, push gently forward on the Sheet Metal Bail, and pivot the Bail out of the Keyboard. BE CAREFUL NOT TO DAMAGE THE LOCKING POST WHEN PUSHING THE BAIL FORWARD.

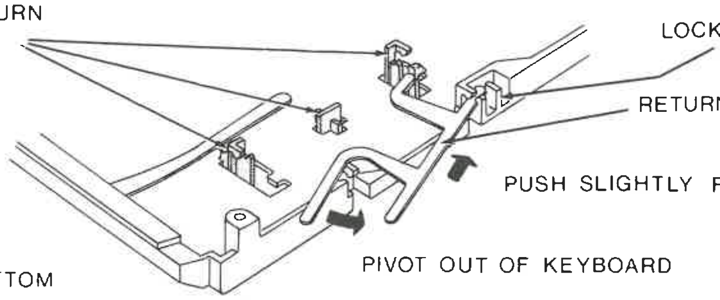

C. Turn the Keyboard upside down, and use a Spring Hook to raise the Striker Spring slightly to disengage it from the Keybutton. CAUTION: DO NOT RAISE THE STRIKER SPRING TOO FAR OR THE SPRING WILL GET DAMAGED. While holding the Spring away from the Keybutton, use the Spring Hook to unsnap the Keybutton Lock Tab from the Keyboard. The Keybutton drops out of the Keyboard Assembly. NOTE: The Spacebar has two Lock Tabs.

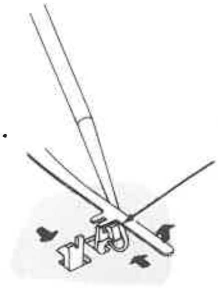

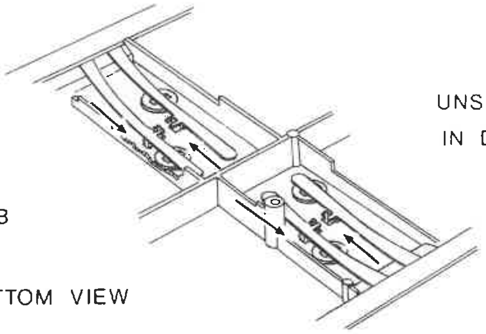

3B. TYPE "B" KEYBOARD KEYBUTTON REMOVALS (cont.)

REPLACEMENT:

A. Align the Keybutton with the holes in the Keyboard, and snap the Keybutton in place.

B. 1) When replacing the Spacebar or Left Shift Key Wire Bail, insert the Bail through the holes in the Keyboard. Make sure the ends of the Bail are properly aligned, and snap the front of the Bail into its locking tabs.

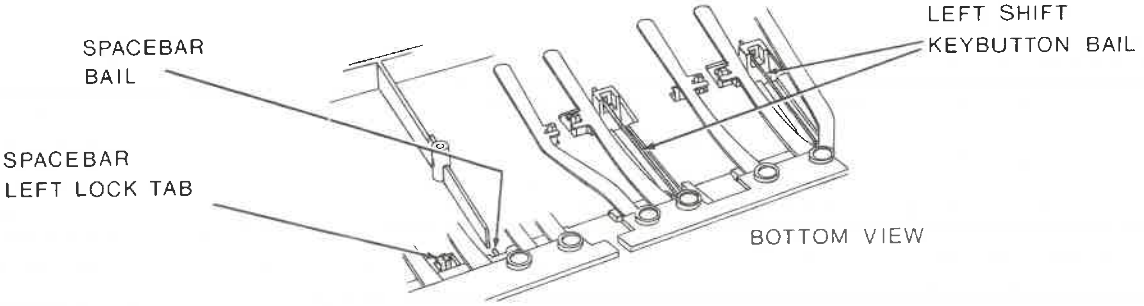

2) When replacing the Return Keybutton Sheet Metal Bail, depress the Keybutton slightly; gently push the end of the Bail slightly against the Keyboard post, and pivot the Bail into position. Make sure the Arms of the Bail seat in the Slots on the Keybutton.

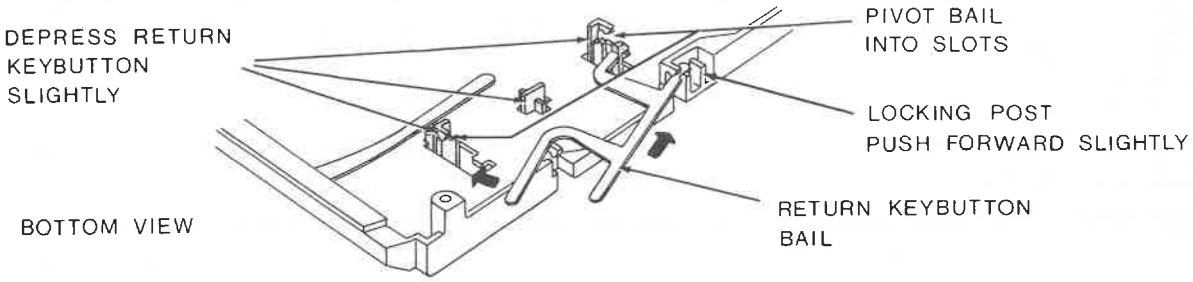

C. Replace the Keyboard in the Casing Base.

ADJUSTMENTS BROKEN: None.

OBSERVE STATIC PRECAUTIONS

4. CONTROL PC BOARD REMOVAL

1) Remove Casing Top and Keyboard (see Removals Index).

2) Disconnect GROUND CABLE (3) from PC Board Connector J2.

3) Disconnect Left End Switch, Right Ribbon Switch, Ribbon Solenoid, Hammer Solenoid, Element Motor, Carrier Motor, Transformer, and Index Motor Connectors.

4) Remove two SCREWS (1), and lift out CONTROL PC BOARD (2).

REPLACEMENT: Reverse procedure. Make sure front of PC Board is under LUGS (4). Refer to Wiring Diagram for connections to PC Board.

ADJUSTMENTS BROKEN: None.

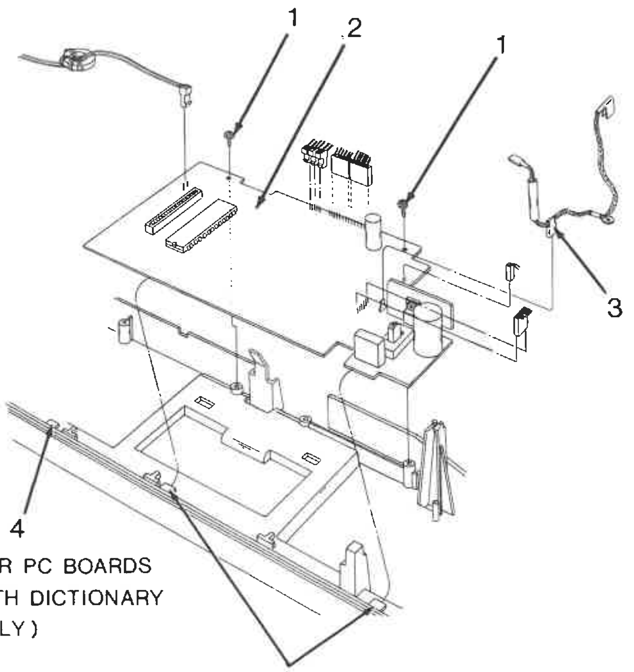

5. FRAME ASSEMBLY REMOVAL (with Carrier & Paper Handling)

1) Remove Casing Top and Keyboard (see Removals Index).

2) Remove two SCREWS (5) and two FOOT RETAINERS (6) from Casing Base.

3) Disconnect Left End Switch, Right Ribbon Switch, Ribbon Solenoid, Hammer Solenoid, Element Motor, Carrier Motor, and Linespace Motor Connectors from Control PC Board.

4) Disconnect Ground Wire Connector from Carrier SIDE FRAME (7).

5) Remove Spiral Harness, Left End Switch, and Index Motor Wires from Casing Base.

6) Lift FRAME ASSEMBLY (8) out of CASING BASE (9). NOTE: This requires some force since the fit is tight. The two rear FEET (10) of the Frames can remain in the Casing Base.

REPLACEMENT: Reverse procedure. Secure the Left End Switch Wires in the Casing Base as illustrated below. Refer to Wiring Diagrams for connections to the PC Board.

ADJUSTMENTS BROKEN: None.

OBSERVE STATIC PRECAUTIONS

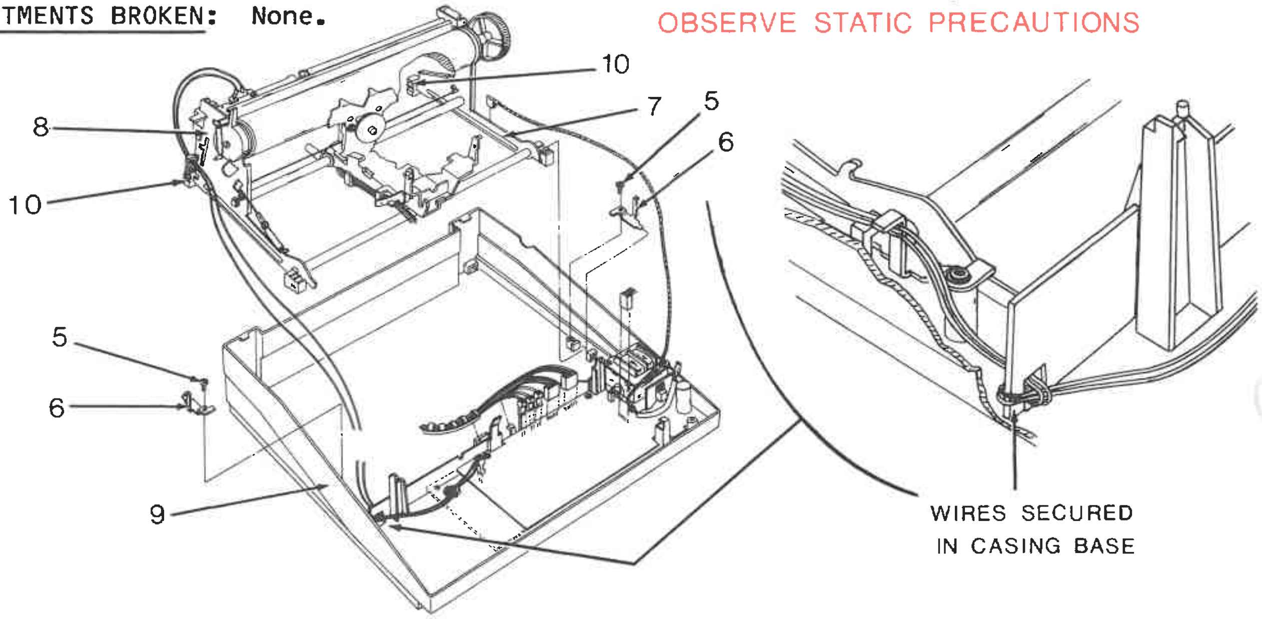

6. TRANSFORMER ASSEMBLY REMOVAL

1) Remove Casing Top and Frame Assembly (see Removal Index).

2) Disconnect CONNECTOR (1) from Control PC Board.

3) Remove two SCREWS (2) from Transformer.

4) Lift out Line Cord STRAIN RELIEF (3) from Casing Base, and lift out Transformer Assembly.

5) On International Models only, disconnect two CONNECTORS (4)to separate LINE CORD (5) from TRANSFORMER ASSEMBLY (6).

REPLACEMENT: Reverse procedure. NOTE: Transformer base has Keyed Studs in Casing Base for easy locating.
ADJUSTMENTS BROKEN: None.

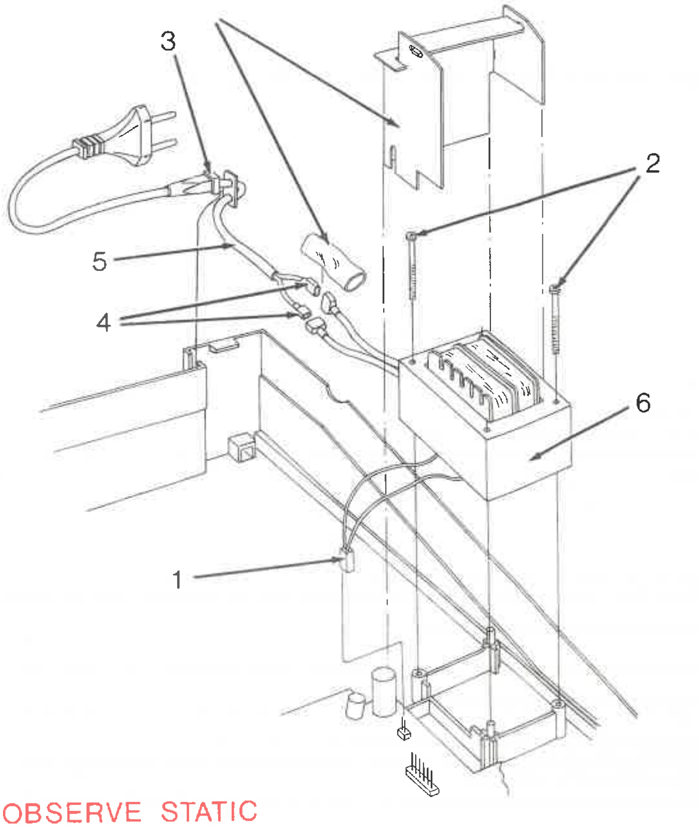

OBSERVE STATIC PRECAUTIONS

7. CORRECTION BAIL REMOVAL

1) Remove Print Element, Ribbon Cassette, and Correction Cassette.

2) Unhook SPRING (10) from Correction Bail.

3) Remove Correction Bail from Carrier by pushing out on Ribbon Cassette PIVOT MOUNTS (9-A).

4) Remove Right Ribbon Switch wires from SLOT (8-A) in Correction Bail.

5) Push MOUNT (7-A) on Right Ribbon Switch Lower HOLDER (7) towards center of Correction Bail and release from Bail.

6) Unhook Lower Switch Holder SPRING (7-C) from Correction Bail. Rotate Lower Switch Holder so Holder is free from Correction Bail.

7) Disconnect Right Ribbon Switch CONTACT (7-B) from Upper Switch Holder. Lift out CORRECTION BAIL (8).

REPLACEMENT: Reverse procedure.
NOTE: Make sure that Upstop Arm of Correction Bail is underneath Upstop Stud on Carrier.
ADJUSTMENTS BROKEN: None.

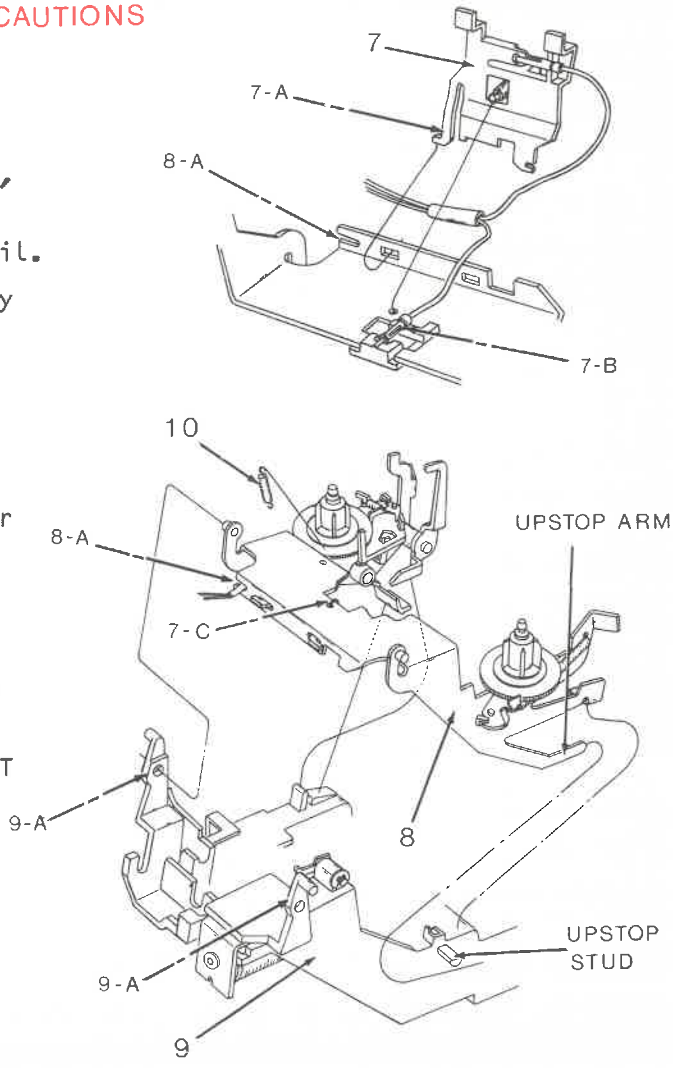

8. CORRECTION/CASSETTE RIBBON SOLENOID REMOVAL

1) Remove Frame Assembly and Correction Bail (see Removals Index).
2) Unhook SPRING (2) from RIBBON SOLENOID (3).
3) Remove two SCREWS (1) and lift out Solenoid.
4) Remove E-RING (6) from Solenoid Plunger. Lift out PLUNGER (5) and SPRING (4).

REPLACEMENT: Reverse procedure.

NOTE: Make sure SOLENOID SPRING (4) is installed as shown in illustration.

ADJUSTMENTS BROKEN: Correction Ribbon Lift Adjustment (Adjustment #7).

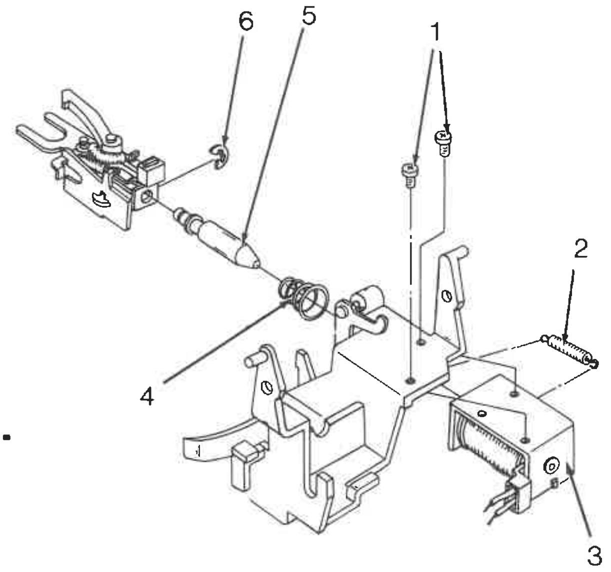

9. LINESPACE MOTOR REMOVAL

1) Remove Casing Top and Frame Assembly (see Removals Index).
2) Remove two SCREWS (8) and lift out LINESPACE MOTOR (7).

REPLACEMENT: Reverse procedure.

NOTE: Make sure Motor Gear meshes with Intermediate Gear.

ADJUSTMENTS BROKEN: None.

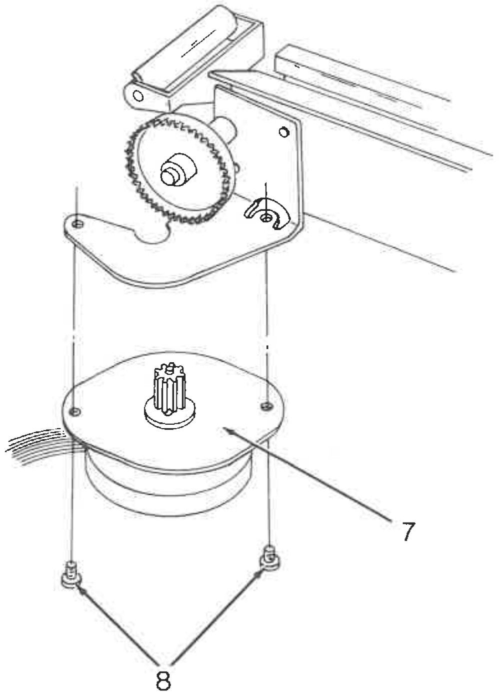

10. RIBBON MECHANISM REMOVAL

NOTE: RIBBON DRIVER (1) may be removed from Ribbon Driver Assembly with no other removals by pulling it straight up out of Assembly with a pair of Needle Nose Pliers. SPRING (2) may fall free. Use Needle Nose Pliers to replace RIBBON DRIVER (1).

1) Remove Frame Assembly Correction Bail, and Correction/Cassette Ribbon Solenoid (see Removals Index).

2) Remove SCREW (10), E-RING (8), STUD (6), and CORRECTION LIFT BELLCRANK (7).

3) Lift out Ribbon Shaft Assembly from CARRIER MOLDING (9).

4) Remove RIBBON DRIVE RATCHET HUB (3) from RIBBON FEED SHAFT (4) by pulling apart.

5) Remove ANTI-BACKUP FEED SPRING (13) from RIBBON FEED SHAFT (4).

6) Remove RIBBON FEED SPRING (5) and BLACK LATCH SPRING (12) from RIBBON FEED ASSEMBLY (11).

REPLACEMENT: Reverse procedure. NOTE: SPRING TAB (13-A) seats in molded NOTCH (9-A) in CARRIER MOLDING (9). Also, make sure SOLENOID SPRING (14) is installed as shown in illustration.

ADJUSTMENTS BROKEN: Correction Ribbon Lift Adjustment (Adjustment #7).

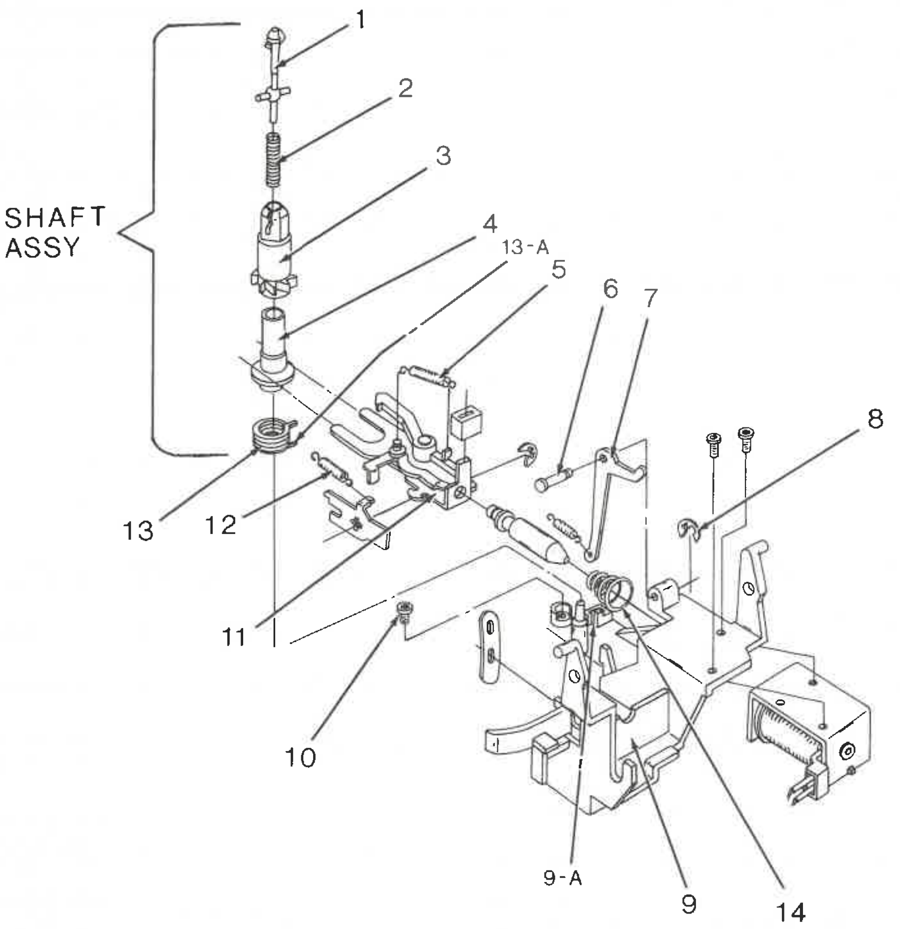

11. HAMMER SOLENOID ASSEMBLY REMOVAL

1) Remove Correction Bail (see Removals Index).
2) Remove RIBBON GUIDE (1) from Hammer PIVOT NUTS (4) and EAR (2-A).
3) Unhook WIRE STRAP (8) from Carrier.
4) Remove two SCREWS (3) and RETAINING WIRE (5).
5) Press PUSH LEVER (11) downward slightly, and lift HAMMER SOLENOID ASSEMBLY (2) out of Carrier.
6) Remove two HAMMER WIRES (10) from spiral WIRE BINDER RETAINER (7).
7) Disconnect Hammer Solenoid CONNECTOR (9) from Control PC Board.

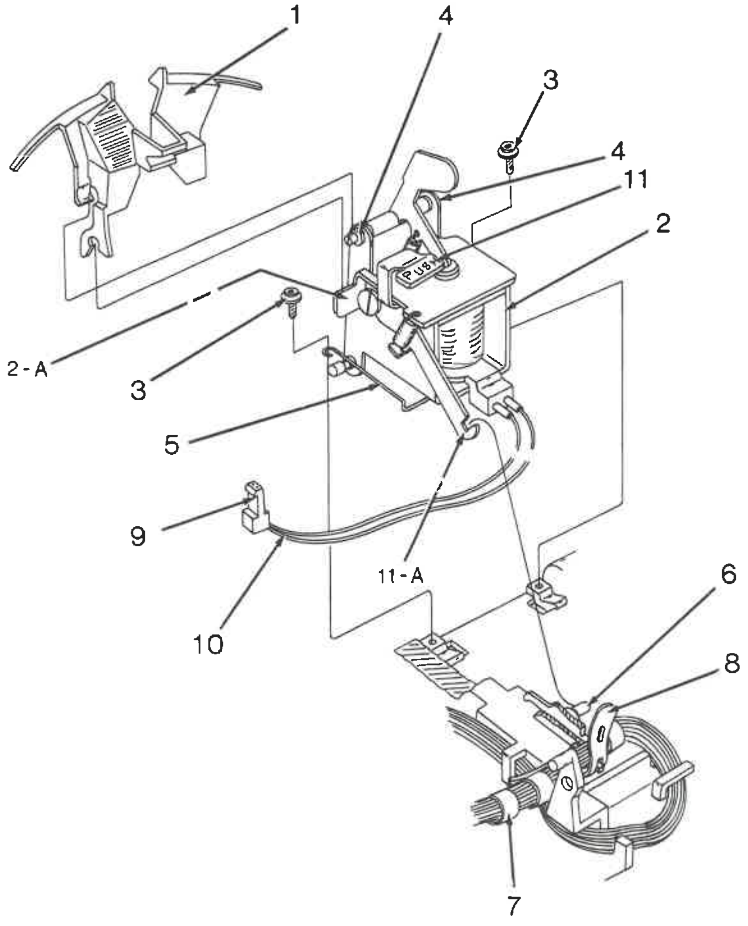

REPLACEMENT: Reverse procedure.

NOTE: Formed area of Retaining Wire fits under Lip of Carrier Molding, and STUD (6) fits in SLOT (11-A).

ADJUSTMENTS BROKEN: None.

14. PLATEN AND PAPER TABLE REMOVAL

1) Remove Casing Top and Frame Assembly (see Removals Index).
2) Unhook SPRING (4) from LINESPACE PINION PIVOT (3). Remove PIVOT (3) and LINESPACE PINION ASSEMBLY (2).
3) Unhook SPRING (10) and remove PAPER RELEASE LEVER (9).
4) Remove E-RING (1).
5) Hold PLATEN KNOB (5) with a 3/8" wrench over square portion of KNOB SHAFT (5-A) and remove SCREW (8). NOTE: If you simply hold right Platen Knob, it will likely break when loosening SCREW (8).
6) Hold PLATEN (6) and remove PLATEN KNOB (5).
7) Lift out PLATEN (6) and PAPER TABLE (7).

REPLACEMENT: Reverse procedure. NOTE: Stud in Paper Table seats in Hole in Paper Release Shaft.
ADJUSTMENTS BROKEN: None.

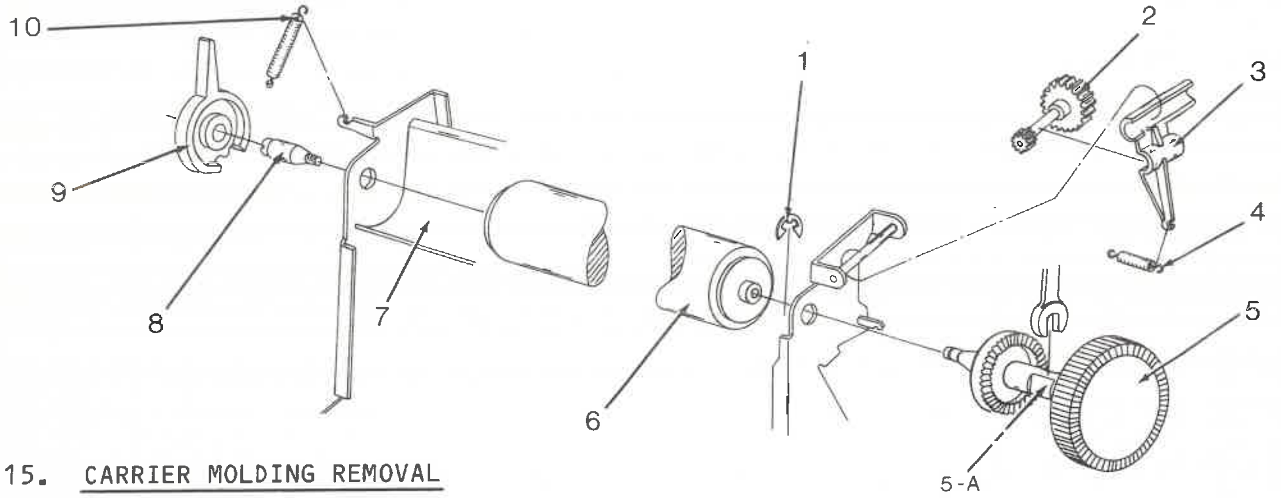

15. CARRIER MOLDING REMOVAL

1) Remove Frame Assembly, Capstan Cable, Platen, and Paper Table (see Index).
2) Remove two E-RINGS (11), from REAR RAIL (16).
3) Disengage CARRIER MOLDING (14) from FRONT RAIL (15), and slide REAR RAIL (16) out of Carrier Molding.
4) Snap off two FELT RETAINERS (12), and remove two FELTS (13).

REPLACEMENT: Reverse procedure. NOTE: To replace Carrier Molding, remove all components from Molding (see Index). For replacement, reverse procedures.

ADJUSTMENTS BROKEN: 2, 4, & 8.

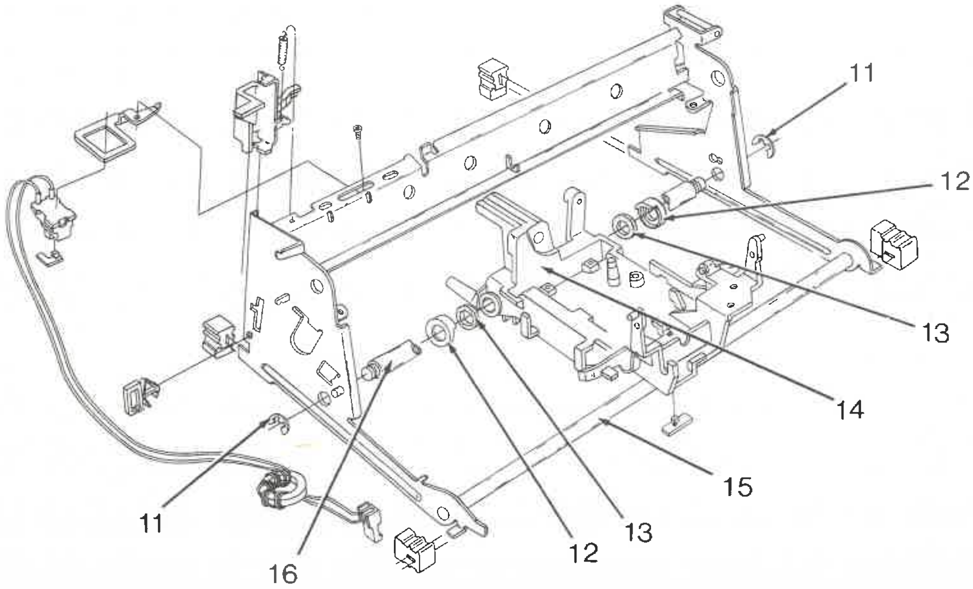

16. CARRIER MOTOR AND CARRIER CAPSTAN/DRIVE CABLE ASSEMBLY REMOVAL

1) Remove Frame Assembly and Carrier Molding (see Removals Index).
2) Remove Right Line Indicator SCREW (4).
3) Remove two SCREWS (8).
4) Unhook SPRING (1).
5) Remove CABLE ANCHOR (15-C) from Right Frame, and lift out CAPSTAN BRACKET (10) and CARRIER MOTOR (9). Remove Carrier Motor from Bracket.
6) Remove NUT (6), SCREW (7), and Capstan/Scissor Gear Assembly from BRACKET (10).
7) Remove C-CLIP (12), SCISSOR GEAR (13), and SPRING (14) from CAPSTAN/DRIVE CABLE ASSEMBLY (15).

REPLACEMENT:

A) Pull Cable through Capstan until mark on Cable appears in Front Capstan SLOT (15-D). If there is no mark on the Cable, mark the Cable approximately 14.1" (14 1/8") from the inside of the ring terminal to the window of the capstan pulley. Wind Spring End of Cable 3 3/4 TO 4 winds clockwise in Grooves of CAPSTAN (15).

   Hold wound Cable in place and wind other end of Cable three turns counterclockwise in Grooves of Capstan. Make sure Cable windings do not cross. Install CARRIER CAPSTAN CLIP (P/N 250159) to hold Carrier Windings in place.

B) Reassemble CAPSTAN (15), SPRING (14), SCISSOR GEAR (13), C-CLIP (12), SCREW (7), and NUT (6) to BRACKET (10).

C) Wind SCISSOR GEAR (13) against spring tension, hold Gear, and insert CARRIER MOTOR (9) through Hole in BRACKET (10). Hold Carrier Motor Gear in mesh with Scissor Gears.

D) Thread SPRING ANCHOR (15-A) through CARRIER MOLDING (5) and assemble BRACKET (10) and SCREWS (8) to CARRIER MOLDING (5).

   NOTE: BRACKET (10) is keyed to fit on Carrier Molding.

E) Assemble CABLE ANCHOR (15-C) to Right Frame.

F) Hook SPRING (1) to SPRING ANCHOR (15-A) and route CABLE (15-B) around GUIDE (16-A): Hook SPRING (1) to Left Frame.

G) Move Carrier to the left to remove Carrier Capstan Clip. Run Carrier back and forth the full length of the Rails several times to exercise Cable.

H) Reassemble remaining parts in reverse sequence.

NOTE: Lubricate Cable Groove in Side Frame and Screw Head (see page 3-3).

ADJUSTMENTS BROKEN: Line Indicator Position (Adjustment #8).

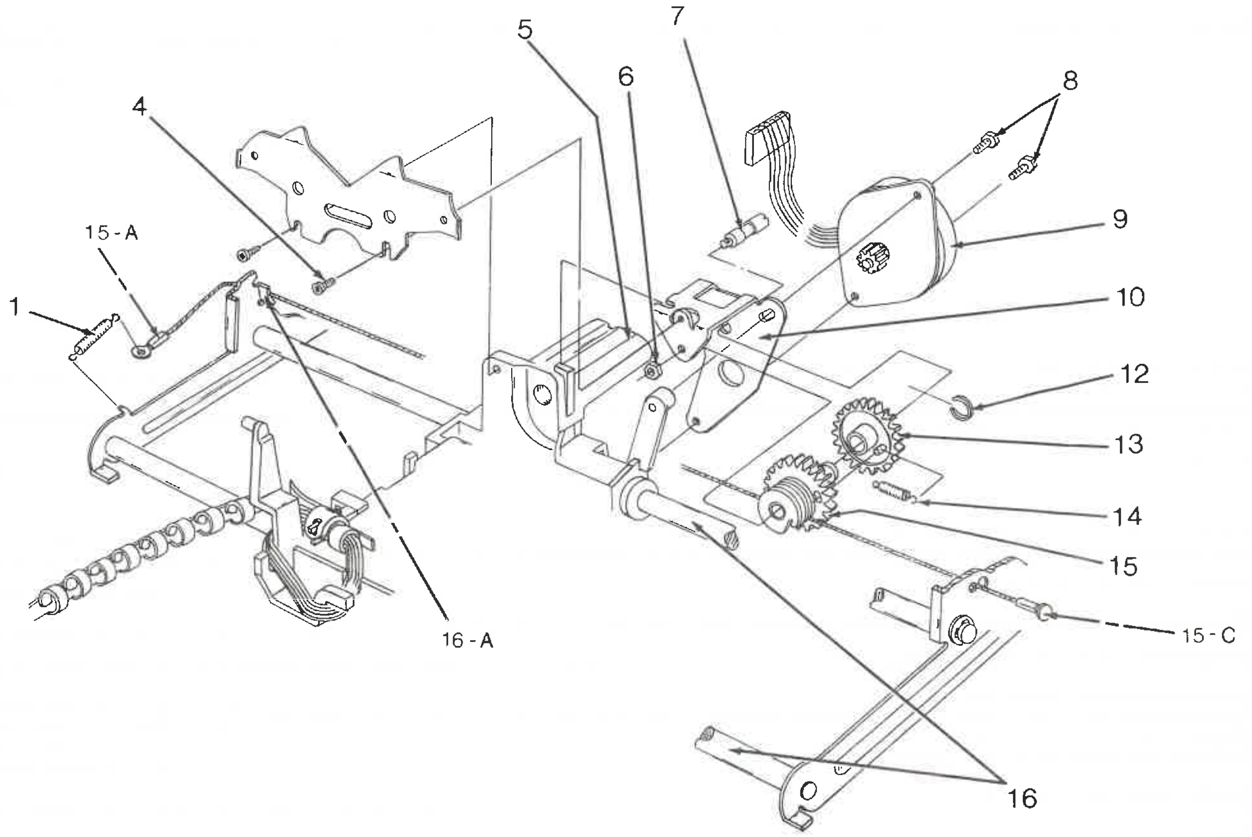
1
4
5
6
7
8
9
10
12
13
14
15
15-A
15-C
16
16-A

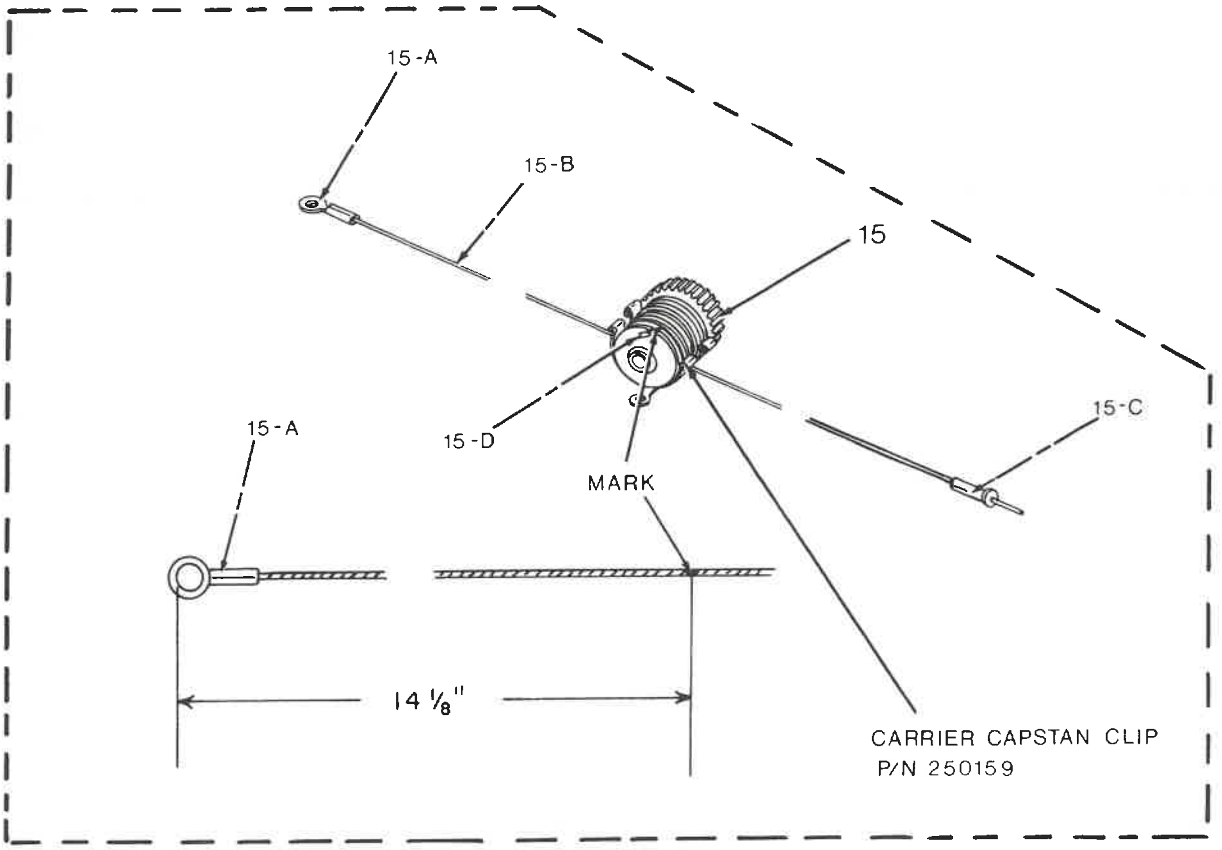
15-A
15-B
15
15-D
15-A
MARK
15-C
14 1/8"
CARRIER CAPSTAN CLIP
P/N 250159

SECTION 5

ADJUSTMENTS

SEQUENTIAL ADJUSTMENT BRANCH DISPLAY		ADJUSTMENT	PAGE NUMBER
1	1.	Left End Switch Adjustment	5-3
2 ↓	2.	Element Motor Position	5-3
3	3.	Hammer Center Position	5-4
4 ↓	4.	Hammer Assembly Position	5-5
5	5.	Ribbon Guide Position	5-5
6	6.	Ribbon Cassette Position	5-6
7	7.	Correction Cassette Lift	5-6
8	8.	Line Indicator Position	5-7
9	9.	Line Indicator Clearance from Platen	5-7

An Arrow (———→) means "affects."

GENERAL ADJUSTMENT PROCEDURE: Casing Top removal is required for access to most checks and adjustments. Additional access requirements are noted when applicable.

All adjustments should be checked with Power Cord unplugged unless otherwise specified.

Circled reference numbers (i.e. (5)) in the illustrations indicate adjustment points.

SEQUENCE OF ADJUSTMENTS: Adjustments in this section are consecutively numbered and should be performed in sequence. Page 5-1 includes a Branch Display that shows sequence relationships among adjustments. The arrow (——→) means "affects." For example:

2
↓
3

4

Read this display as follows: 2 affects 3; 3 & 4 affect no other adjustment; 3 depends on 2 being correct.

ENERGIZING ELEMENT MOTOR FOR ADJUSTMENTS

Hold down the "E" Keybutton; depress the Lid Switch Actuator (or close Lid); and turn power on. Release the Keybutton and Lid Switch Actuator when Carrier movement stops. The Shift LED flashes and the Element Motor stays energized for one minute. After one minute, the machine beeps and the Carrier moves to Space 12 (Non-Dictionary). For Dictionary models, the Carrier stops at Space 12 and after a one minute timeout, a beep is heard. This procedure may be repeated as often as necessary to make the adjustment.

SELF TYPING

The machine is equipped with a self typing program in the Electronics. When this program is activated, the machine prints out a line of characters, corrects a few characters on the line, and performs a linespace and carrier return. The machine will continue this self typing until power is turned off.

To enter the Self Typing Mode, depress Lid Switch Actuator (or close Lid) and hold the Return Keybutton down; then turn power on. Release the Keybutton and Lid Switch Actuator after self typing begins.

If the Keyboard is disconnected from the machine, Self Typing can be entered by shorting together pins 3 & 16 on the Keyboard Connector J1 (illustrated below) and depressing the Lid Switch when power is turned on. Remove the wire and release the Lid Switch Actuator after Self Typing begins.

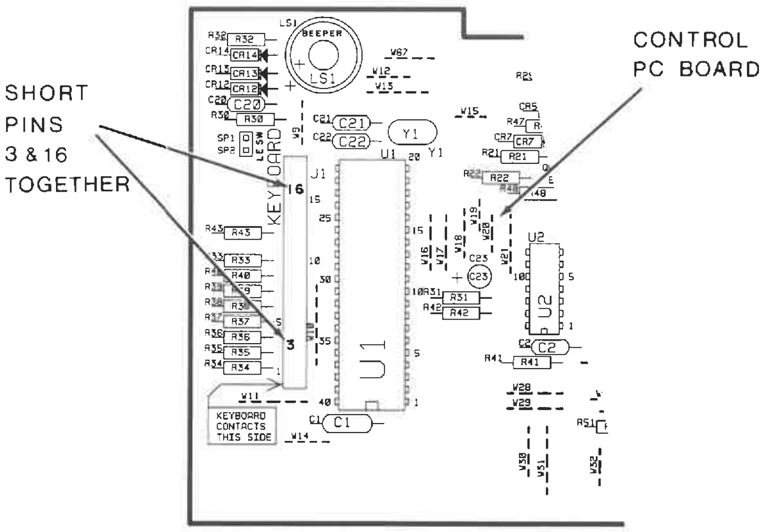

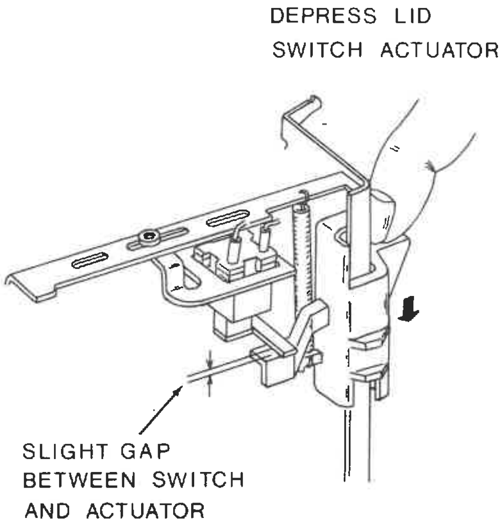

1. Left End Switch Adjustment

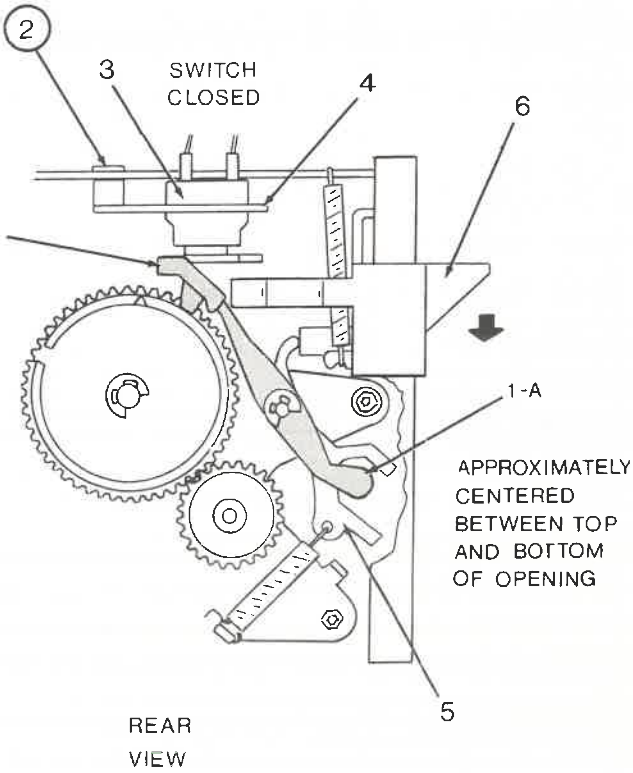

REQUIREMENT:

When the Element rotates at the LEFT END SWITCH (3) during initialization, POSITIONER TAIL (1-A) should be approximately centered between the top and bottom of the POSITIONER ACTUATOR (5) Slot opening.

TO CHECK:

Depress LID SWITCH ACTUATOR (6) until there is a slight gap between Switch and Actuator. Turn Power on. As Element begins to rotate at Left End, turn Power off and check requirement.

ADJUSTMENT:

Loosen Lid Switch SCREW (2), place SWITCH BRACKET (4) in center of adjustment travel slot and tighten. Initialize machine and check requirement. If requirement is <u>not</u> met, loosen SCREW (2) and slightly move Switch Bracket left or right. Tighten Screw and recheck requirement.

FINAL CHECK:

Depress and hold Lid Switch Actuator until there is a slight gap between Switch and Actuator. Turn Power On. Carrier should move to Left End; Element should rotate to Home Character (e), and Carrier should move right to Preset Left Margin. Turn Power off and release Lid Switch Actuator.

2. Element Motor Position

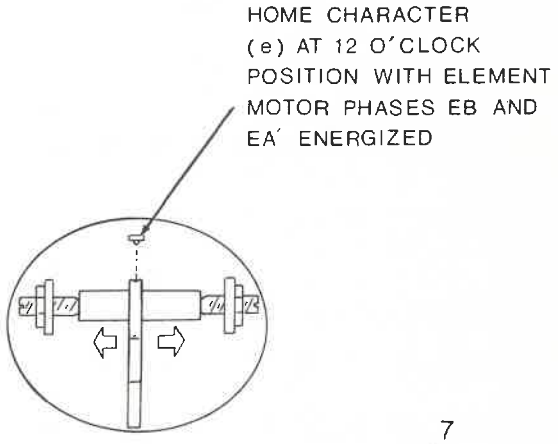

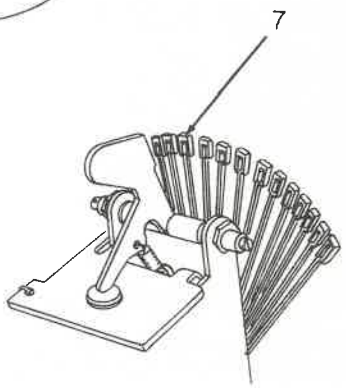

REQUIREMENT:

With Phases EB and EA′ energized, Element Motor should hold the Home Character (e) ELEMENT PETAL (7) at 12 o'clock position.

TO CHECK:

Hold down the "E" Keybutton, depress the Lid Swtich actuator, and turn power on to energize the Element Motor for one minute. Home Character Element Petal should be at 12 o'clock position, and parallel with Hammer. Turn power off and repeat this procedure if more time is required.

2. Element Motor Position (continued)

ADJUSTMENT:

1. With power off, loosen two SCREWS (1).
2. Energize Element Motor Phases EB and EA′ (refer to "TO CHECK" on page 5-3).
3. Rotate ELEMENT MOTOR (2) so that Home Character (e) Element Petal is at 12 o'clock position. MOTOR TIMING MARK (2-A) may align with TIMING MARK (3-A).
4. Hold Motor in position and tighten upper SCREW (1). Then tighten lower SCREW (1). Check position of Element Petal and fine adjust if necessary. Turn power off

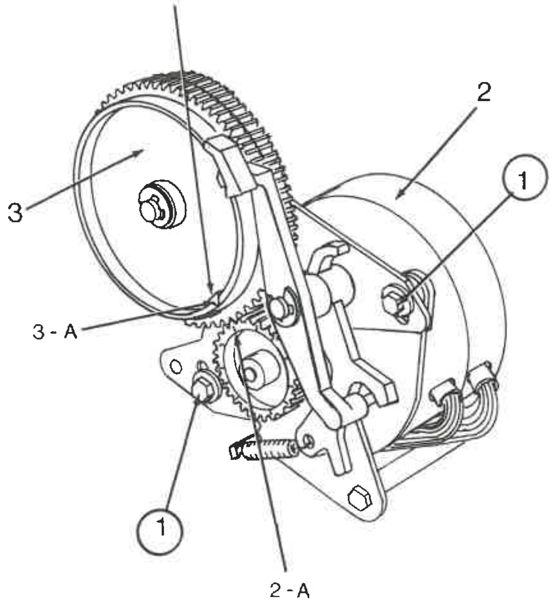

3. Hammer Center Position

REQUIREMENT:

A) With Element Motor Phases EB & EA′ energized, notch of HAMMER (5) should align with Prism of ELEMENT PETAL (4).

   TO CHECK: Energize Element Motor Phases EB and EA′ (refer to Adjustment #2 "TO CHECK" on page 5-3). Manually press HAMMER (5) against ELEMENT PETAL (4). Petal should not move left or right when Notch of Hammer engages Prism of Petal.

B) HAMMER (5) should be free on its pivots with no more than .0015" side play.

ADJUSTMENT:

1. Energize Element Motor Phases EB and EA′ (refer to Adjustment #2 "TO CHECK" on page 5-3).
2. Remove Ribbon Guide from Hammer Pivot Nuts.
3. Loosen NUTS (7) & (8) and regulate Right PIVOT SCREW (6) to meet Requirement A; tighten Right NUT (7).
4. Hold Hammer against Right PIVOT SCREW (6), and regulate Left PIVOT SCREW (9) to meet Requirement B; tighten Left NUT (8).
5. Replace Ribbon Guide onto Hammer Pivot Nuts.

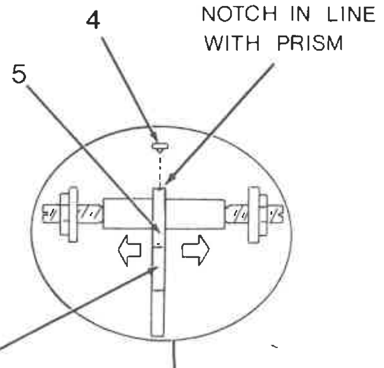

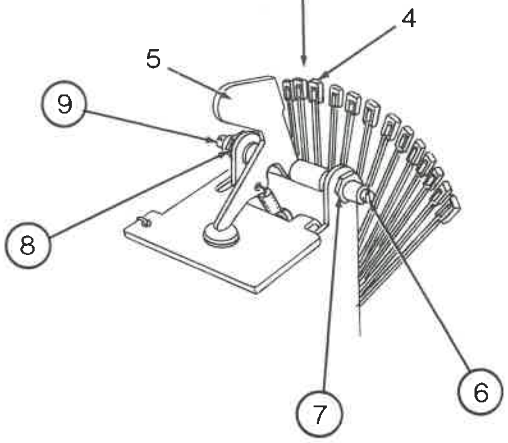

4. Hammer Assembly Position

REQUIREMENT

With HAMMER ASSEMBLY (1) latched in print position, there should be .135"-.143" (3.42-3.63 mm) clearance between Rear of HAMMER SHAFT (1-A) and ELEMENT DRIVER PADS (2-A). Check with Print Element and Ribbon Guide removed.

NOTE: The above requirement is for the Zinc Diecast Hammer. With the Sheet Metal Hammer there should be .182"-.190" (4.62-4.82 mm) clearance between Rear of HAMMER SHAFT (1-A) and ELEMENT DRIVER PADS (2-A).

LEFT SIDE VIEW

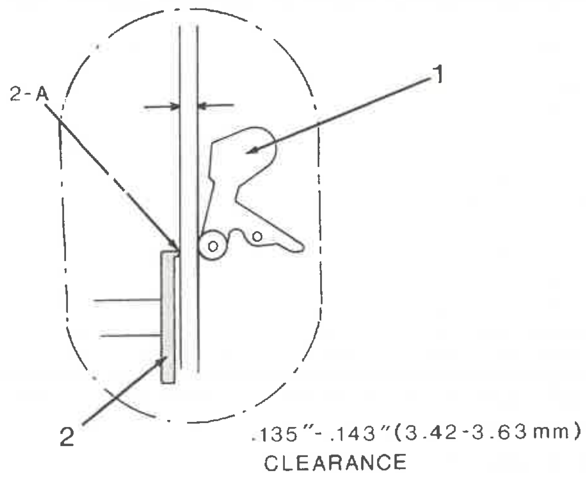

ADJUSTMENT:

1. Loosen RETRACTOR BRACKET SCREW (3).
2. Rotate ELEMENT DRIVER (2) so that one pad is opposite Hammer Shaft.
3. With HAMMER ASSEMBLY (1) latched in print position, insert a .139" Shim between HAMMER SHAFT (1-A) and DRIVER PAD (2-A).
4. Hold HAMMER ASSEMBLY (1) against Shim, and tighten SCREW (3).
5. Replace Ribbon Guide and Print Element.

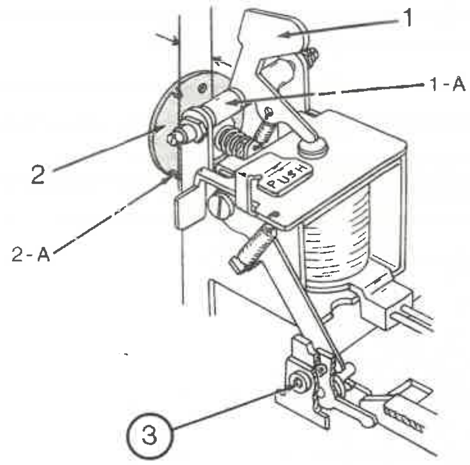

5. Ribbon Guide Position

REQUIREMENT:

With a Ribbon Cassette in place, there should be .020"-.030" clearance between the Ribbon and the typeface of the Print Element.

NOTE: This should provide clearance between the Print Element and the inside surface of the Ribbon Guide.

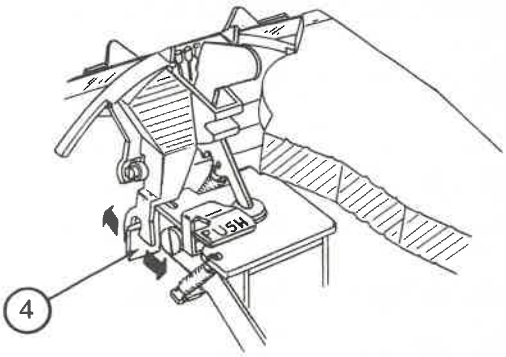

ADJUSTMENT:

Form Hammer Solenoid EAR (4) forward or rearward to position Ribbon Guide.

TOP VIEW

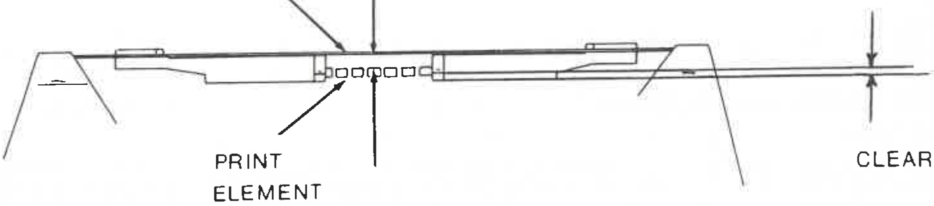

6. Ribbon Cassette Position

REQUIREMENT:

When typed with a Script Print Element, the top of the "%" character should be .030"-.050" from the top of the Cassette Ribbon.

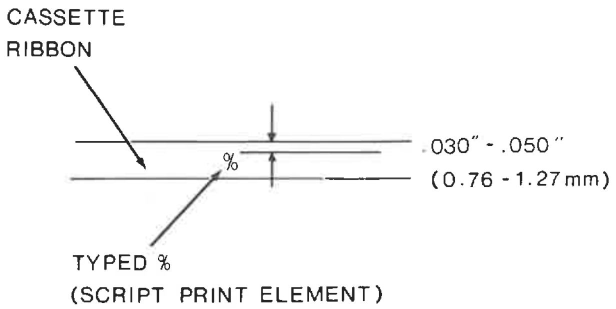

ADJUSTMENT:

Form DOWNSTOP ARM (1) on Correction Lift Bail up or down.

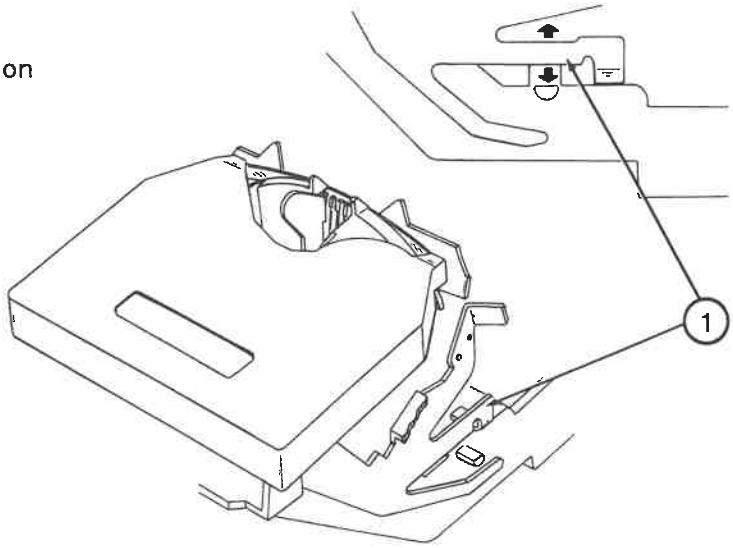

7. Correction Cassette Lift

REQUIREMENT:

When correcting with a Script Print Element, the distance between the top of the "%" character and the top of the correction ribbon should equal the distance between the bottom of a lower case "g" and the bottom of the correction ribbon. There should be .005"-.025" clearance between the Upstop Arm and Stud during a correction cycle.

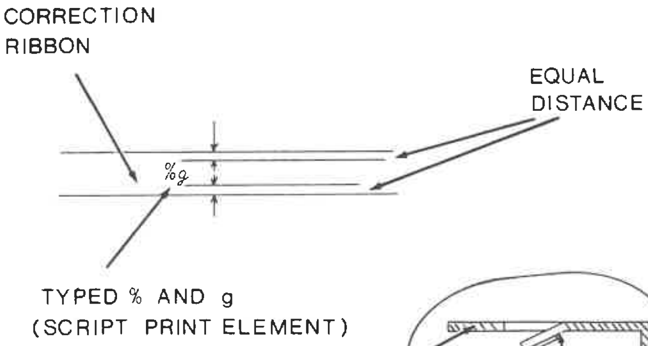

ADJUSTMENT:

Form ARM (2-A) on CORRECTION LIFT BAIL (2).

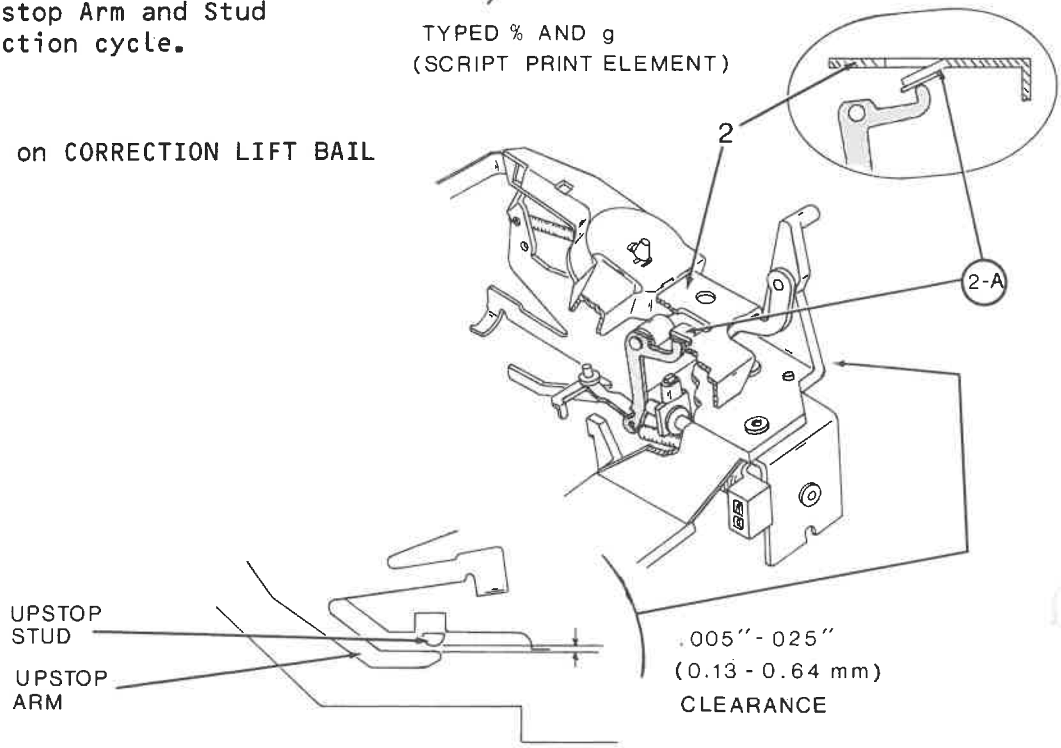

8. Line Indicator Position

<u>REQUIREMENT:</u>

LINE INDICATOR SURFACES (1-A) should rest .005"-.015" below a row of printed "i's," and should be parallel with the typed characters.

<u>ADJUSTMENT:</u>

Position LINE INDICATOR (1) with attaching SCREWS (2).

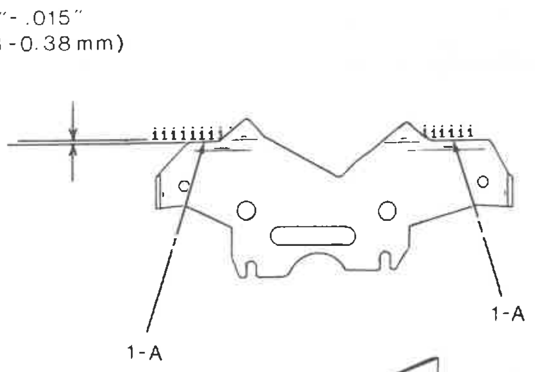

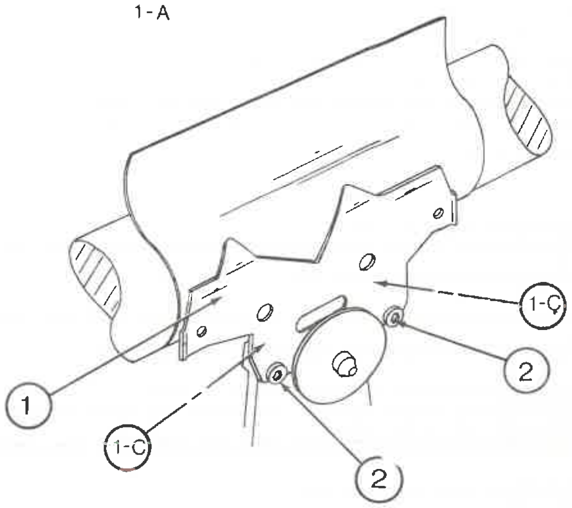

9. Line Indicator Clearance from Platen

<u>REQUIREMENT:</u>

There should be .005"-.020" clearance between LINE INDICATOR (1) and PLATEN (3).

<u>ADJUSTMENT:</u>

Form Left and Right LINE INDICATOR SURFACES (1-C) forward or rearward.

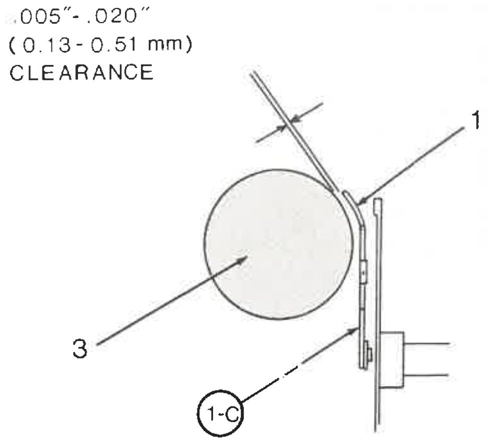

LEFT SIDE VIEW

SECTION 6

TROUBLESHOOTING

TROUBLESHOOTING INDEX

SUBJECT	PAGE
Initialization Sequence	6-2 & 6-3
Description	6-2
Flow Chart	6-3
Troubleshooting Guide	6-4 to 6-8
Troubleshooting Techniques	6-4
Watchdog Circuit	6-4
Machine Totally Dead	6-5
Machine Fails to Initialize or Repeats Initialization	6-5 & 6-6
Machine Completes Initialization, but Shift LED Flashes	6-7
Index Motor Fails	6-7
Prints Wrong Characters	6-7
Hammer Solenoid Fails to Fire	6-8
Beeper Fails to Beep	6-8
Ribbon Cassette Feeds, but Correction Cassette does not Lift and Feed	6-8
Poor Vertical Registration	6-8
Left Margin Changes	6-8
Resistance & Voltage Checks	6-9 & 6-10
Keyboard Troubleshooting	6-11
Keyboard Service Functions at Power UP	6-12

INITIALIZATION SEQUENCE

The sequence of events which occur during initialization is described below. Understanding this process enables the technician to compare what does happen with what should happen, which can often lead to quick diagnosis of a problem.

1. When the Power Switch is turned on, the Ribbon Solenoid quickly energizes to insure the Ribbon mechanism is in its proper starting position. The Carrier moves .400" to the right to assure that the Element Home Positioner is not holding the Left End Switch closed, and then moves .100" to the left.
2. The Carrier Motor Shaft is stabilized by the Electronics applying holding current to the Carrier Motor phases.
3. The Index Motor Shaft is rotated for 1/2 forward linespace and then 1/2 reverse linespace to make sure the Drive Gears, Pinion, and Platen Gear are seated properly.
4. Quick rotation of the Element Motor Shaft takes place to snap the Element onto the Drive Disc (a maximum of 2 1/2 revolutions).
5. The Electronics checks if the Left End Switch is open. If the Switch is closed, the Electronics holds the Carrier stable until the Switch opens, and then begins initialization again.
6. The Carrier moves left for a maximum of four seconds to check the closing of the Left End Switch. If the Left End Switch never closes, the Initialization Sequence repeats itself every four seconds until the switch is closed or power is turned off. NOTE: On Non-Dictionary models, the electronics checks that the Right Ribbon Switch is open. If open initialization continues, if closed the Carrier moves to Space 8 or 9 and stops. Then, the Shift LED flashes.
7. The Carrier moves .100" to 1.00" to the right and Electronics checks if the Switch opens. If the Switch is closed, the Electronics holds the Carrier stable until the Switch opens, and then begins initialization again.
8. The Carrier moves to the left until the Left End Switch closes, and then another .100" to the left.
9. The Electronics energizes the Element Motor counterclockwise for up to 2.7 revolutions. When the ear on the Element Home Positioner drops into the notch on the Rear Scissors Gear under Spring Tension, the Left End Switch opens. The Electronics stops shaft rotation and checks that the Left End Switch opened on the Element home phases. If the Left End Switch does not open, the Electronics holds the Carrier stable until the switch opens. If the Switch does not open when the proper Element Motor phases are turned on, the initialization sequence repeats until this does occur, or until power is turned off.
10. Carrier moves approximately .250" to the right. This new location is reference position Zero.
11. The Electronics checks to see if a Keyswitch for a Keyboard Service Function is closed. If so, the Electronics performs the function.
12. If Keyboard Service Function Keyswitches are open, the Carrier moves to the Preset Left Margin, and the Electronics applies holding current to the Carrier Motor Phases. NOTE: On Dictionary models, the electronics checks to see if the Right Ribbon Switch is open. If open, initialization is complete. If not, the Carrier stops at the Left Margin, Keyboard is disabled, and the Shift LED flashes.
13. Initialization is now complete.

INITIALIZATION SEQUENCE

FLOW CHART

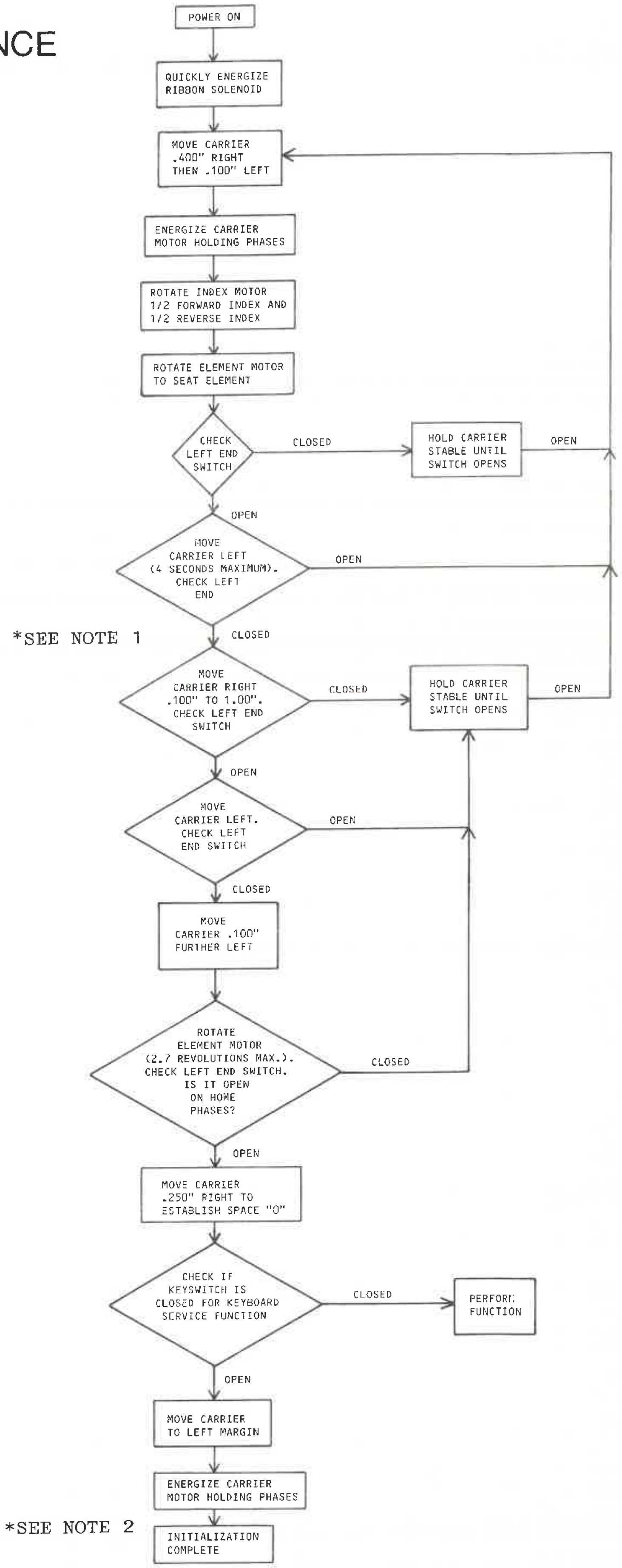

NOTES:

1) CHECK THAT RIGHT RIBBON SWITCH IS OPEN ON NON-DICTIONARY MODELS.

2) CHECK THAT RIGHT RIBBON SWITCH IS OPEN ON DICTIONARY MODELS.

TROUBLESHOOTING GUIDE

This Troubleshooting Guide provides probable cause for some specific machine problems. Since electrical problems may cause a machine failure during initialization, the technician should read and thoroughly understand the preceding section on the Initialization Sequence.

OBSERVE STATIC PRECAUTIONS

IMPORTANT: When working with static sensitive devices, such as the Liquid Crystal Display (LCD) and Printed Circuit Boards, be sure to observe static precautions to prevent damage to these devices.

GENERAL TROUBLESHOOTING TECHNIQUES

-- Look for the obvious (broken wires, unplugged connectors, etc.)

-- Check the problem part first, and then logically limit the possibilities through all associated wiring, connectors, and circuit boards.

-- Check mechanical functions for freeness, lubrication, and proper operation.

-- Check standard adjustments.

Diagram Reference Symbol

[7B-1] Indicates appropriate diagram page number.

WATCHDOG CIRCUIT

The Watchdog Circuit is a safety circuit that monitors the length of time that the Ribbon Solenoid, Hammer Solenoid, Element Motor, and Carrier Motor are energized. If the above components remain energized longer than normal, the Watchdog Circuit shuts down the +18 VDC power supply, which in turn shuts down the +5 VDC power supply.

When checking the power supplies (+18 VDC & +5 VDC) of the machine with any or all connectors disconnected from the Control PC Board, Point A on the schematic must be shorted to ground. If not, the Watchdog Circuit thinks there is a short on one of the components and shuts down the two power supplies.

NOTE: An open coil/winding or a broken connection can trigger the Watchdog Circuit to shut down the Power Supplies.

OBSERVE STATIC PRECAUTIONS

SYMPTOM: MACHINE TOTALLY DEAD

Probable Causes: 1) Transformer
2) Control PC Board

How to Check Power Circuit

A) Disconnect Power Cord from AC outlet. Disconnect Transformer Connector P-TRA from Control PC Board. Plug Power Cord into AC outlet.

Use a Voltmeter to measure the AC voltage across the two pins of Transformer Connector P-TRA. The reading should be 25-35 Volts AC. If not, replace Transformer.

B) If the reading is good, disconnect Power cord, and reconnect Transformer Connector P-TRA to the Control PC Board. Plug in Power Cord, and measure the AC Voltage across Connector P-TRA. The reading should be approximately 24 Volts AC. If not, there's a short on the Control PC Board.

C) If the reading is good, check the ON-OFF Switch on the PC Board. If it checks okay, the electronics on the Control PC Board are faulty--replace the Board.

SYMPTOM: MACHINE FAILS TO INITIALIZE OR REPEATS INITIALIZATION

NOTE: When checking initialization, move Carrier to the center of the machine, and turn OFF-ON Switch ON.

Probable Causes: 1) Control PC Board
2) Ribbon Solenoid
3) Hammer Solenoid
4) Element Motor
5) Carrier Motor
6) Left End/Lid Switch

How To Analyze Initialization Problems:

A) Make a general inspection of mechanical components of machine. Check for bent or broken parts. Move Carrier back and forth, and rotate Element Motor Shaft to check for binds.

B) If machine still does not initialize properly, analyze what happens when the machine is turned on. Compare what does happen with what should happen as described in the Initialization Sequence on pages 6-2 and 6-3.

C) Service Hints: Failure of certain component parts may result in the following symptoms: 7B-1

SYMPTOM	PROBABLE CAUSE
Machine Initializes properly but keeps repeating initialization	1) Watchdog Circuit on Control PC Board is defective
Carrier Motor vibrates noisily, and continuously tries to initialize	1) Carrier Motor Phase or Phase connection is open or shorted 2) Control PC Board--motor circuit bad
Element Motor vibrates noisily, and continuously tries to initialize	1) Element Motor Phase or Phase connection is open or shorted 2) Control PC Board--motor circuit bad
Carrier vibrates against Left Side Frame then tries to reinitialize	1) Left End Switch or switch connection is always open 2) Control PC Board--Switch circuit bad
Carrier never moves to the left frame, but constantly tries to reinitialize (moves approximately 12 spaces each time)	1) Left End Switch is always closed 2) Control PC Board--Switch circuit bad
Carrier or Element doesn't move at all	1) Motor connectors not connected to Control PC Board 2) Control PC Board--Loss of 18 VDC to Motors
Carrier moves right three spaces and spins Print Element. This sequence is repeated until Carrier contacts Right Frame.	1) Ribbon Solenoid is open or Ribbon Solenoid wiring to Control PC Board is defective.
No Carrier movement Left or Right, but Print Element wiggles about 1-2 petals every second.	1) Hammer Solenoid is open or Hammer Solenoid wiring to Control PC Board is defective.

SCHEMATIC DIAGRAM

MODELS WITHOUT DICTIONARY

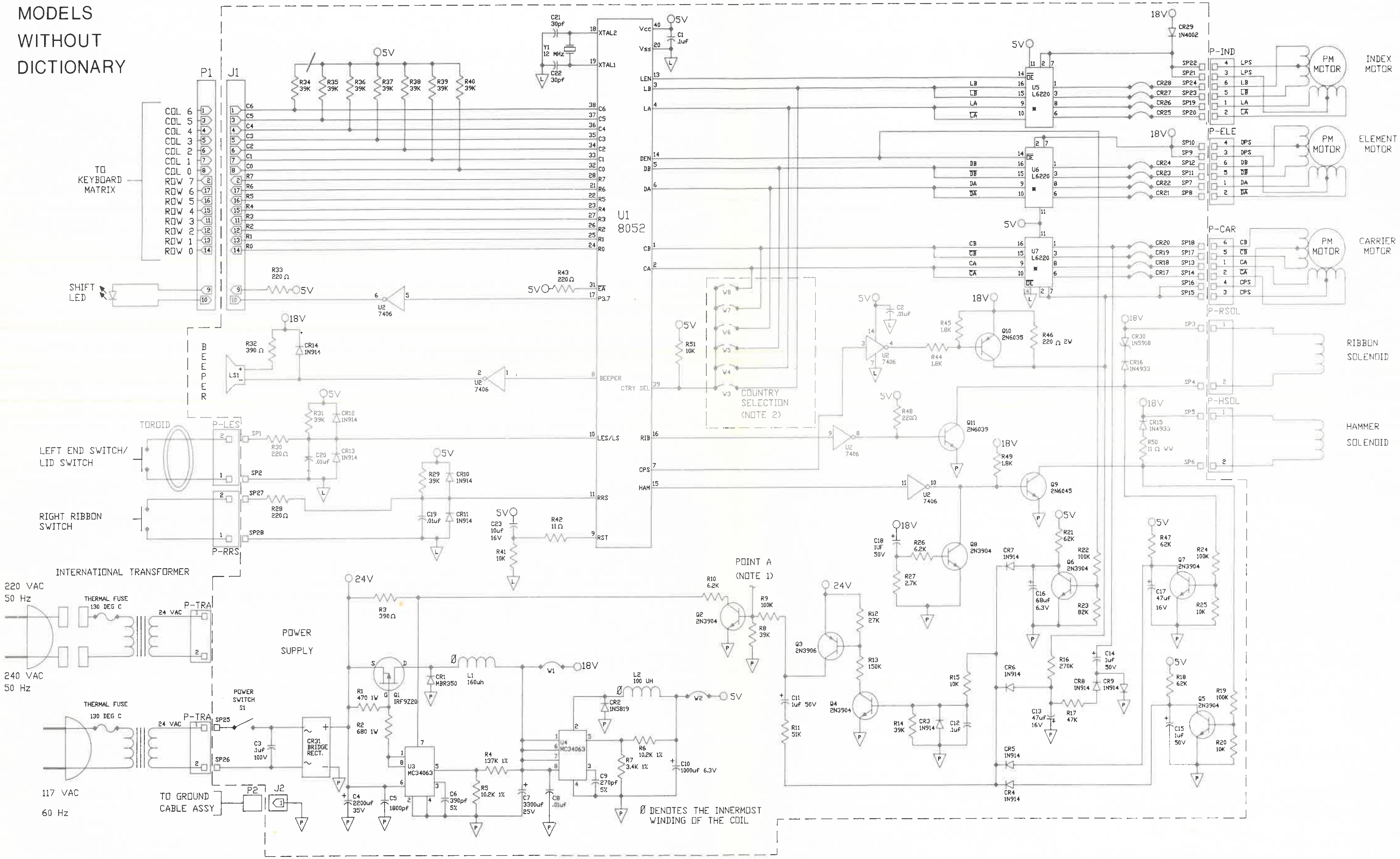

COUNTRY SELECTION CHART

COUNTRY	W3	W4	W5	W6	W7	W8
USA/CAN	OUT	OUT	OUT	OUT	OUT	OUT
FRENCH/CAN	OUT	OUT	OUT	OUT	IN	OUT
SPAN/AM	OUT	OUT	OUT	OUT	OUT	IN
AUSTRALIA	IN	OUT	OUT	OUT	OUT	OUT
SINGAPORE	IN	OUT	OUT	OUT	OUT	OUT
GERMANY	OUT	IN	OUT	OUT	OUT	OUT
NETHERLANDS	OUT	OUT	IN	OUT	OUT	OUT
FRENCH/BELGIUM	OUT	OUT	OUT	IN	OUT	OUT

NOTES:
1) TO DISABLE WATCH DOG CIRCUIT, GROUND POINT A
2) COUNTRY SELECTION JUMPERS (SEE CHART)
3) EQUALS POWER GROUND   EQUALS LOGIC GROUND
4) GROUND IS CONNECTED TO PINS 4,5,12, AND 13 OF U5,U6, AND U7

OBSERVE STATIC PRECAUTIONS

SYMPTOM: MACHINE COMPLETES INITIALIZATION, BUT SHIFT LED FLASHES

Probable Causes:
1) Lid Switch Mechanism
2) Control PC Board
3) Right Ribbon System or mismatch of Ribbon Cassettes

To Check:

A) Check that Left End/Lid Switch contacts are open when the Lid is closed. If not, check for mechanical binds in mechanism. If mechanism operates properly, replace Left End/Lid Switch. If switch does not resolve problem, check wiring first, then replace Control PC Board. 7E-1

B) Check that Right Ribbon System Switch is open when the proper Ribbon Cassette is installed on the Carrier. If not, check for mechanical binds in mechanism. If mechanism operates properly, replace Right Ribbon System Switch contacts. If switch does not resolve problem, check wiring first, then replace Control PC Board. 7E-1

SYMPTOM: INDEX MOTOR VIBRATES NOISILY AND FAILS TO LINESPACE

Probable Causes:
1) Index Motor--phase open or shorted
2) Control PC Board--Index motor circuit defective

To Check:

Check Index Motor for open or shorted phase windings (refer to Resistance Checks in this Section). If Index Motor is defective, replace it. If not, replace Control PC Board. 7B-1

SYMPTOM: PRINTS WRONG CHARACTERS OR STROBES HAMMER STRIKES BETWEEN PRINT ELEMENT PETALS

Probable Causes:
1) Defective or incorrectly adjusted Left End Switch (Adj. #1).
2) Incorrect Element Motor Position (Adj. #2).
3) Incorrect Hammer Center Position (Adj. #3).
4) Broken Disc on Element Drive Shaft or binding Element Drive Shaft.
5) Linefinder or Ribbon Guide interferes with Print Element.
6) Improper Element Scissors Gear tension.
7) Inside Scissors Gear slips on Element Drive Shaft.
8) Defective Element Motor.
9) Defective Controller PC Board.

OBSERVE STATIC PRECAUTIONS

SYMPTOM: HAMMER SOLENOID FAILS TO FIRE

Probable Causes: 1) Hammer Solenoid
2) Control PC Board

How to Check for Solenoid Problems:

Check Solenoid for mechanical binds. Measure resistance of Solenoid and replace it if it is defective (refer to Resistance Checks in this Section). If resistance is good, replace Control PC Board. 7B-1

NOTE: If the Hammer Solenoid fails to fire, mechanically the Ribbon Cassette fails to advance.

SYMPTOM: BEEPER FAILS TO BEEP

Probable Causes: 1) Defective Beeper or Beeper Circuit on Control PC Board

To Check:

Try an action that requires the Beeper to function. If it does not beep, replace Beeper or Control PC Board.

SYMPTOM: RIBBON CASSETTE FEEDS, BUT CORRECTION CASSETTE DOES NOT LIFT AND FEED

Probable Causes: 1) Ribbon Solenoid
2) Control PC Board

To Check:

Check Ribbon Solenoid and Correction Bail for mechanical binds. Measure resistance of Solenoid and replace it if defective (refer to Resistance Checks in this Section). If resistance is good, replace Control PC Board. 7B-1

SYMPTOM: POOR VERTICAL CORRECTION REGISTRATION

Probable Causes: 1) Ribbon Guide/Linefinder resting on Platen
2) Paper Feed Rollers binding
3) Platen binding (problem usually occurs at left end)

To Check: Locate the source of the bind and free up the parts.

SYMPTOM: LEFT MARGIN CHANGES

Probable Cause: Mechanical interference with Carrier movement

To Check: Locate and remove cause of interference.

OBSERVE STATIC PRECAUTIONS

RESISTANCE AND VOLTAGE CHECKS

Use the following Resistance and Voltage Check Charts when troubleshooting problems with electrical components. With Volt/Ohmmeter probes on specified pins of the Connector, the resistance or voltage readings should read approximately at the values given in the charts. NOTE: Readings may vary between Volt/Ohmmeters. Refer to the Wiring Diagrams in the appropriate Diagrams Section and Pin locations.

RESISTANCE CHECKS

All Resistance Checks must be made with the Power OFF and the appropriate Connector unplugged from the Control PC Board.

Refer to page 7B-1 to identify Connectors.

* When checking resistance of Motors, both common Connectors on each motor should be measured before assuming a phase is open. The correct resistance readings should occur on one or the other common, but not both.

COMPONENT	CONNECTOR	PIN NUMBERS	APPROXIMATE RESISTANCE
*Element Motor	P-ELE		
COM and A		3 or 4 & 1	16Ω ± 7%
COM and A'		3 or 4 & 2	16Ω ± 7%
A and A'		1 & 2	32Ω ± 7%
COM and B'		3 or 4 & 5	16Ω ± 7%
COM and B		3 or 4 & 6	16Ω ± 7%
B' and B		5 & 6	32Ω ± 7%
*Carrier Motor	P-CAR		
COM and A		3 or 4 & 1	36Ω ± 7%
COM and A'		3 or 4 & 2	36Ω ± 7%
A and A'		1 & 2	72Ω ± 7%
COM and B'		3 or 4 & 5	36Ω ± 7%
COM and B		3 or 4 & 6	36Ω ± 7%
B' and B		5 & 6	72Ω ± 7%
*Index Motor	P-IND		
COM and A		3 or 4 & 1	50Ω ± 7%
COM and A'		3 or 4 & 2	50Ω ± 7%
A and A'		1 & 2	100Ω ± 7%
COM and B'		3 or 4 & 5	50Ω ± 7%
COM and B		3 or 4 & 6	50Ω ± 7%
B' and B		5 & 6	100Ω ± 7%
Left End Switch	P-LES	1 & 2	0 Ohms when closed; Infinite (∞) ohms when open
Ribbon Solenoid	P-RSOL	1 & 2	9.60Ω ± 1
Hammer Solenoid	P-HSOL	1 & 2	1.98Ω ± .2
Transformer	AC Plug	Prongs	Approximately 17Ω
	P-TRA	1 & 2	Approximately 1Ω
Right Ribbon Switch	P-RRS	1 & 2	0 Ohms when closed Infinite (∞) Ohms when open

OBSERVE STATIC PRECAUTIONS

DC VOLTAGE CHECKS

All DC Voltage checks must be made with Connectors in place and Power On. Set Voltmeter for DC Volts and appropriate voltage range. With Power Off, touch common probe of Voltmeter to Logic Ground, and touch the other probe to the Check Point listed in the Chart. Turn Power On, allow machine to initialize, and take readings (Idle State). Refer to the appropriate Diagrams Section for Connector locations. [7B-1] [7D-1]

CAUTION: Whenever performing checks with power On, take care not to short two points together with the Voltmeter probes.

COMPONENT	CHECK POINT	LOCATION	APPROXIMATE DC VOLTAGE
Control PC Board:			
+36 VDC	R1	LEFT SIDE	+36 VDC
+18 VDC	W1	LEFT SIDE	+18 VDC
+5 VDC	W2	RIGHT SIDE	+5 VDC
Left End Switch Closed:	P-LES	PIN 1	0 VDC
		PIN 2	+.15 VDC
Left End Switch open:	P-LES	PIN 1	0 VDC
		PIN 2	+4.4 VDC
Ribbon Solenoid	P-RSOL	PINS 1-2	+18 VDC
Hammer Solenoid	P-HSOL	PINS 1-2	+18 VDC
Element Motor	P-ELE	PINS 1-6	+18 VDC
Carrier Motor	P-CAR	PINS 1-6	+.7 or +4 VDC

NOTE: Voltage reading depends upon location of the Carrier Rotor during holding current.

Index Motor	P-IND	PINS 1-6	+17.6 VDC

TRANSFORMER AC VOLTAGE CHECKS

Make Transformer AC Voltage checks with Connectors in place and Line Cord plugged into AC outlet. Set Voltmeter for AC Volts and appropriate voltage range. Touch one probe to one point listed below, and the other probe to the other point. [7B-1]

CAUTION: Whenever performing checks with power on, take care not to short two points together with the Voltmeter probes.

CHECK	CHECK POINTS	APPROXIMATE VOLTAGE
Transformer Input	Check Line Voltage at Power Outlet	Line Voltage- 117 VAC OR 220 VAC OR 240 VAC
Transformer Output	P-TRA PINS 1 & 2	24 VAC minimum

OBSERVE STATIC PRECAUTIONS

KEYBOARD TROUBLESHOOTING PROCEDURE

NOTE: Refer to the appropriate Diagrams Section for Keyboard Switch Layout and Matrix Charts. 7A-3

1. Identify the Matrix Position Number(s) for the Key(s) from the Keyboard Switch Layout Chart (the character "1" is matrix position S2).

2. Identify the Column and Row for that position from the Keyboard Matrix Chart. Then determine Keyboard Connector Pin numbers that correspond with the column and row of the suspect key (i.e. position S2 is tied to Column C1 and Row R0, which correspond to pins 7 & 14 of the Keyboard Connector).

3. Determine whether the problem is with the Keyboard or Control PC Board as follows:

   A) Remove the Keyboard from the machine under test. Power up the machine to initialize it and actuate the Lid Switch.

      To check operation of any individual character, simply short the appropriate pins on the Control PC Board Connector J1 to see if that particular character types. For example, if checking the character "1," touch a Jumper Wire between pins 7 & 14 of Connector J1. This allows the typewriter to type the character "1" and repeat it until the Jumper Wire is removed. If the character fails to type, the problem is in the Control PC Board and replacement is necessary.

   B) If character does type, then problem is a Keyboard fault.

4. Diagnose a Keyboard fault as follows:

   A) Touch the one lead of an ohmmeter to the pin on the Keyboard Connector that corresponds with the appropriate Column. Then touch the other lead to the pin on the Keyboard Connector that corresponds with the appropriate Row [i.e. for position S2 touch one lead to Connector P1, Pin 7, (Column C1) and the other lead to Connector P1, Pin 14 (Row R0)].

      NOTE: Since there are no Diodes used with this Keyboard, it makes no difference which ohmmeter lead is touched to the Matrix Column and which one is touched to the Matrix Row.

   B) Depress the Key being checked. If the switch is good, the ohmmeter should indicate less than 1000 ohms resistance. (Readings vary with different meters. To know what the meter should read, take a similar reading on a known good Key Switch in the Keyboard circuit). If meter indicates an open, replace the Switch Plunger or Molded Dome Switches.

   C) If there are a definite 7 or 8 characters or functions that do not operate, check to see if those 7 or 8 characters or functions are in the same Column or Row in the Keyboard Matrix. If they are, check all switches in that Column or Row through the Keyboard Connector. If they are bad, replace the Keyboard PC Board.

OBSERVE STATIC PRECAUTIONS

KEYBOARD SERVICE FUNCTIONS AT POWER UP

Some Keybuttons perform service functions if they are depressed and held down during initialization. To activate any of these functions, with the Jackets in place and deck closed (if Jackets are off machine, activate Lid Switch) depress the desired keybutton and hold it down until initialization is complete. Release the Keybutton after the Service Function begins.

If the Keyboard is disconnected from the machine, Service Functions can be entered by shorting the appropriate Keyswitch Row and Column pins on Keyboard Connector J1. Remove the jumper after the Service Function begins. Refer to the appropriate Keyboard Layout Chart and Matrix Diagram to determine which Row and Column should be shorted to perform the Service Function. 7A-2 7A-3

KEYBUTTON	FUNCTION
RETURN	Initiates Self Typing. The machine prints out a line of characters, corrects some of them, and then performs a linespace and carriage return. The machine continues this self typing until power is turned off.
"E"	Energizes Element Motor phases EB and EA' for one minute to make adjustments (Shift LED flashes at same time). After one minute, the machine beeps and the Carrier moves to Space 12 (Non-Dictionary Models). For Dictionary Models, the Carrier stops at Space 12 and beeps after one minute. The machine must be turned off and then on again to energize for additional one minute intervals. After one minute time out, the electronics returns to normal typing mode.
"S"	Prints out the part number of the Master (Non-Dictionary Models) and Master and Slave (Dictionary Models) of the Microcontrollers installed on the Control PC Board. Then the Carrier moves to the Left Margin for typing.

SECTION 7

DIAGRAMS

MODELS WITHOUT DICTIONARY

		PAGE NUMBER
7A	KEYBOARD DIAGRAMS	
	Keyboard Layout Chart	7A-2
	Keyboard Matrix Diagram	7A-3
7B	WIRING DIAGRAM	7B-1
7C	WIRE ROUTING	
	Frames	7C-1
	Carrier	7C-2
7D	COMPONENT DIAGRAM	
	Control PC Board	7D-1
7E	SCHEMATIC DIAGRAM	7E-1

KEYBOARD LAYOUT CHART

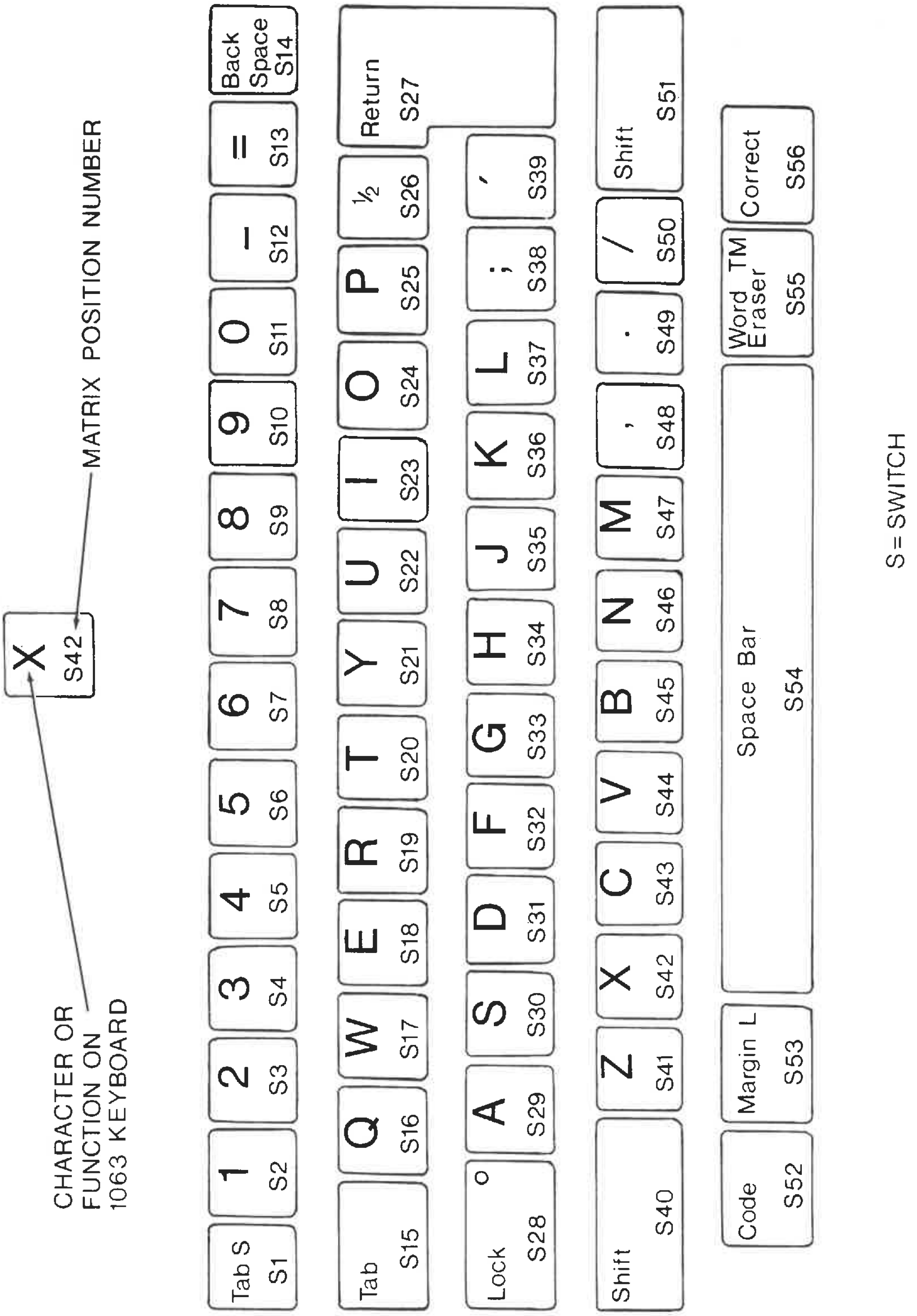

KEYBOARD MATRIX DIAGRAM

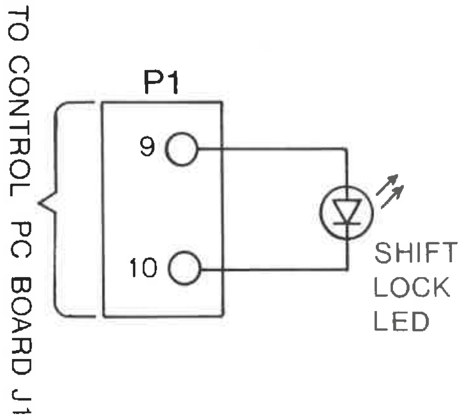

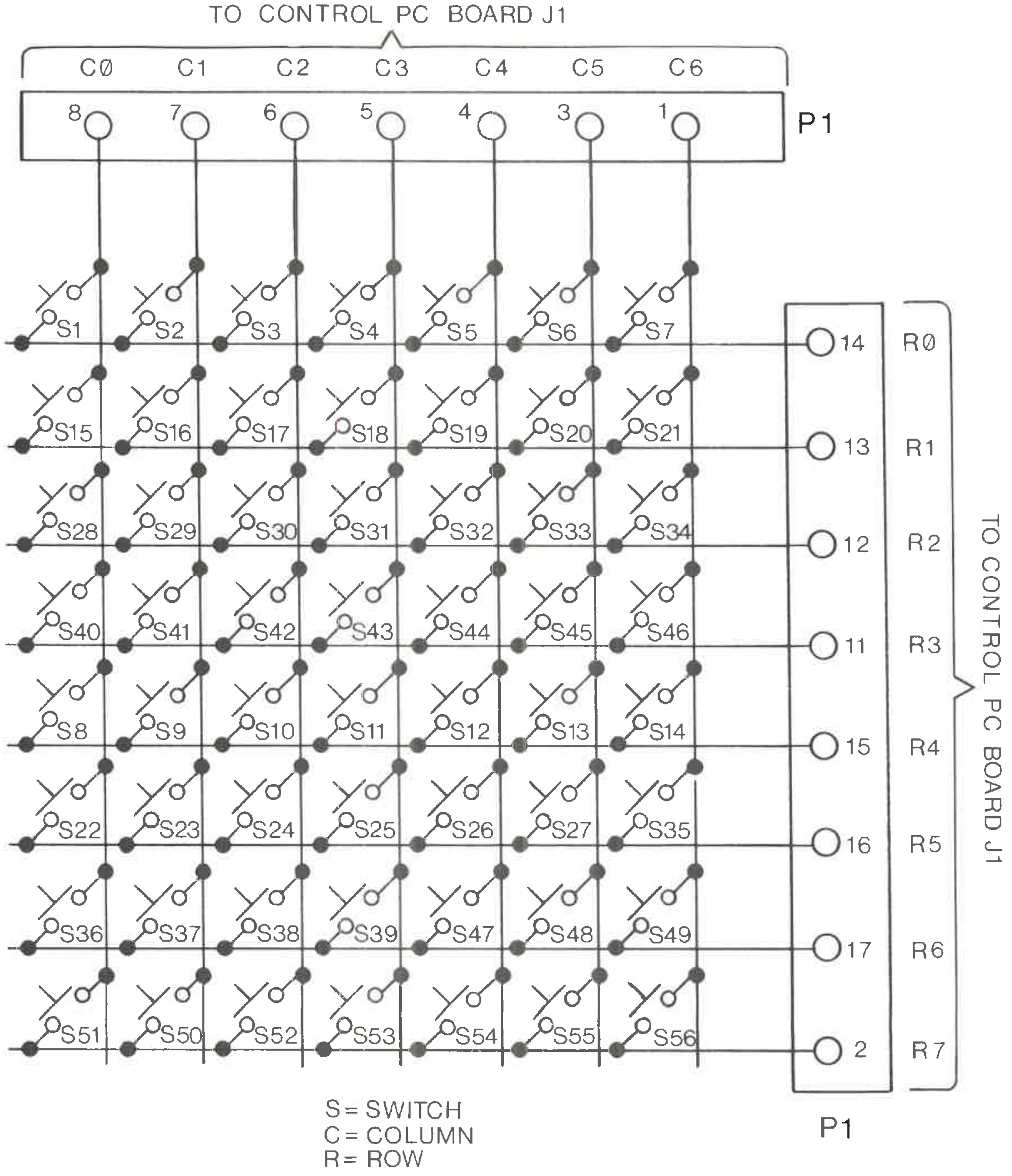

WIRING DIAGRAM

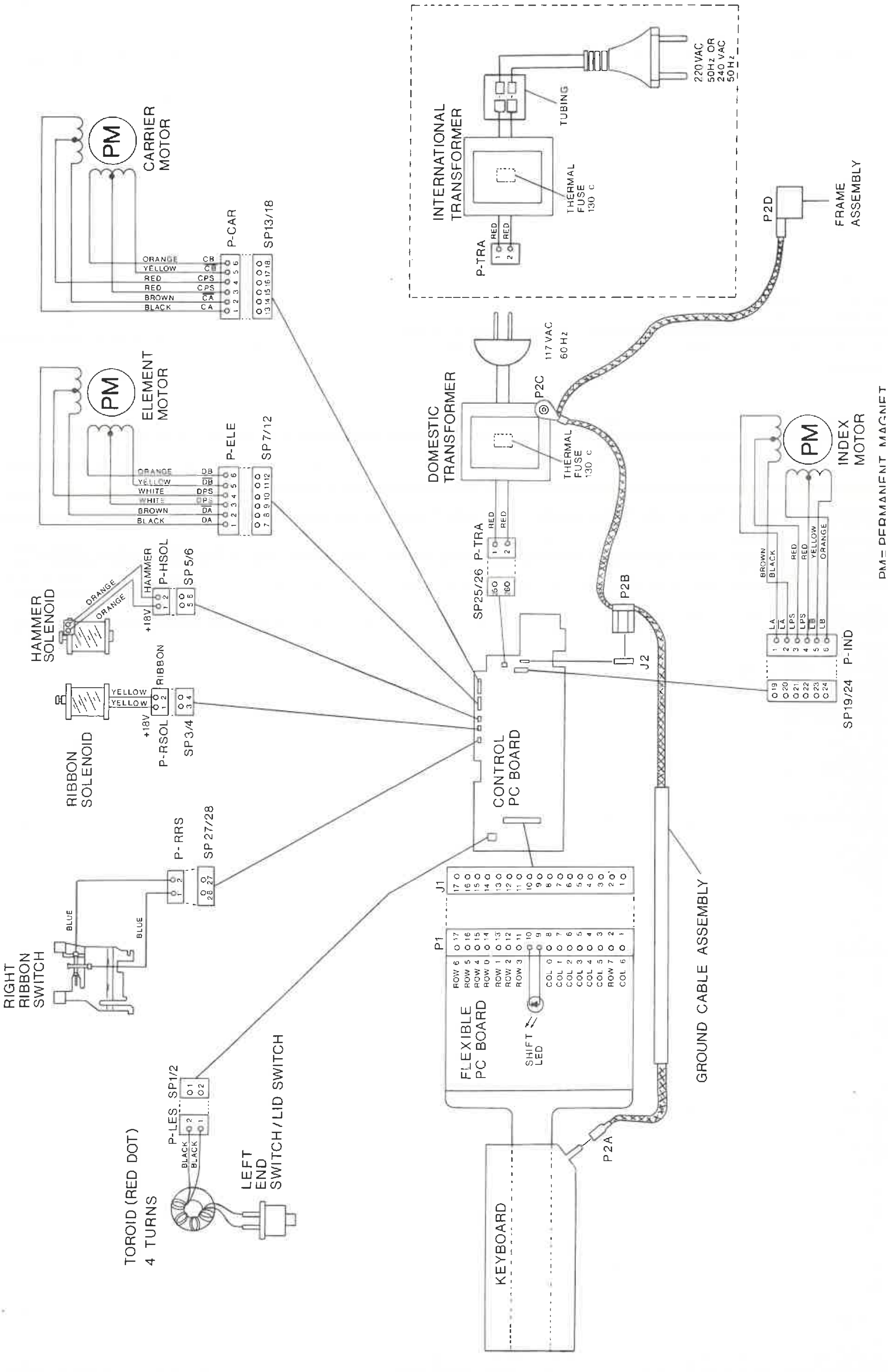

WIRE ROUTING

FRAMES

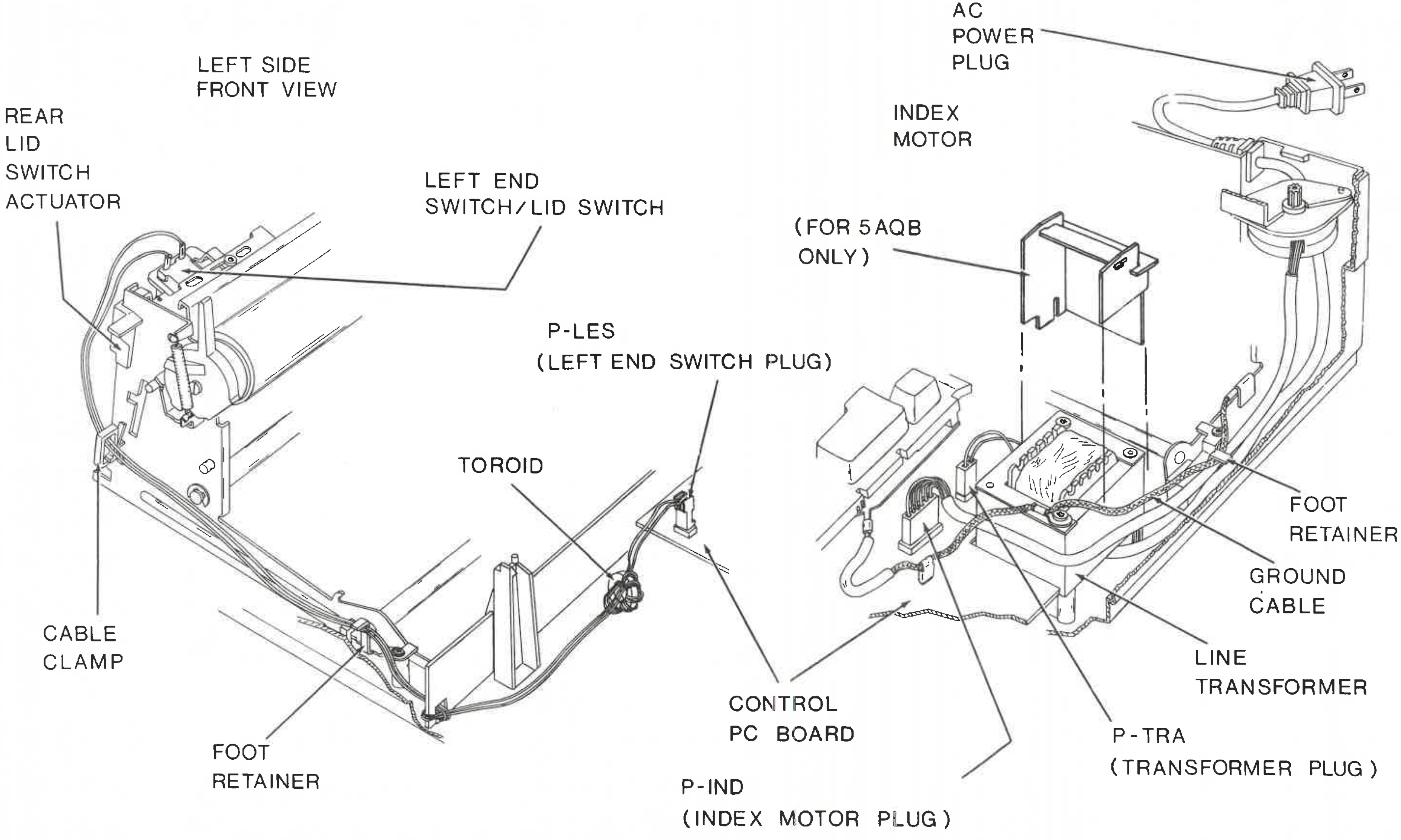

WIRE ROUTING
CARRIER

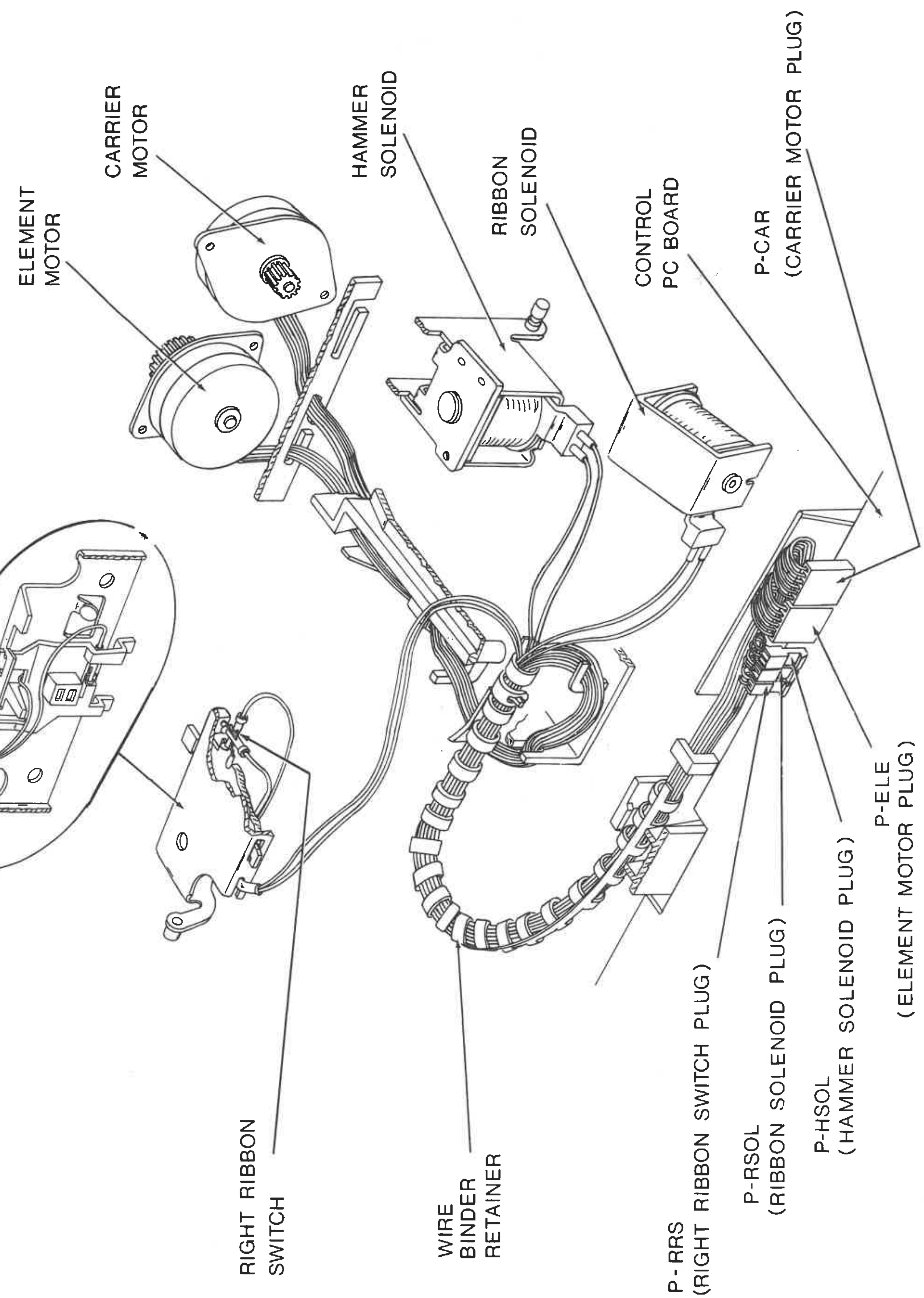

COMPONENT DIAGRAM

CONTROL PC BOARD

MODELS WITHOUT DICTIONARY

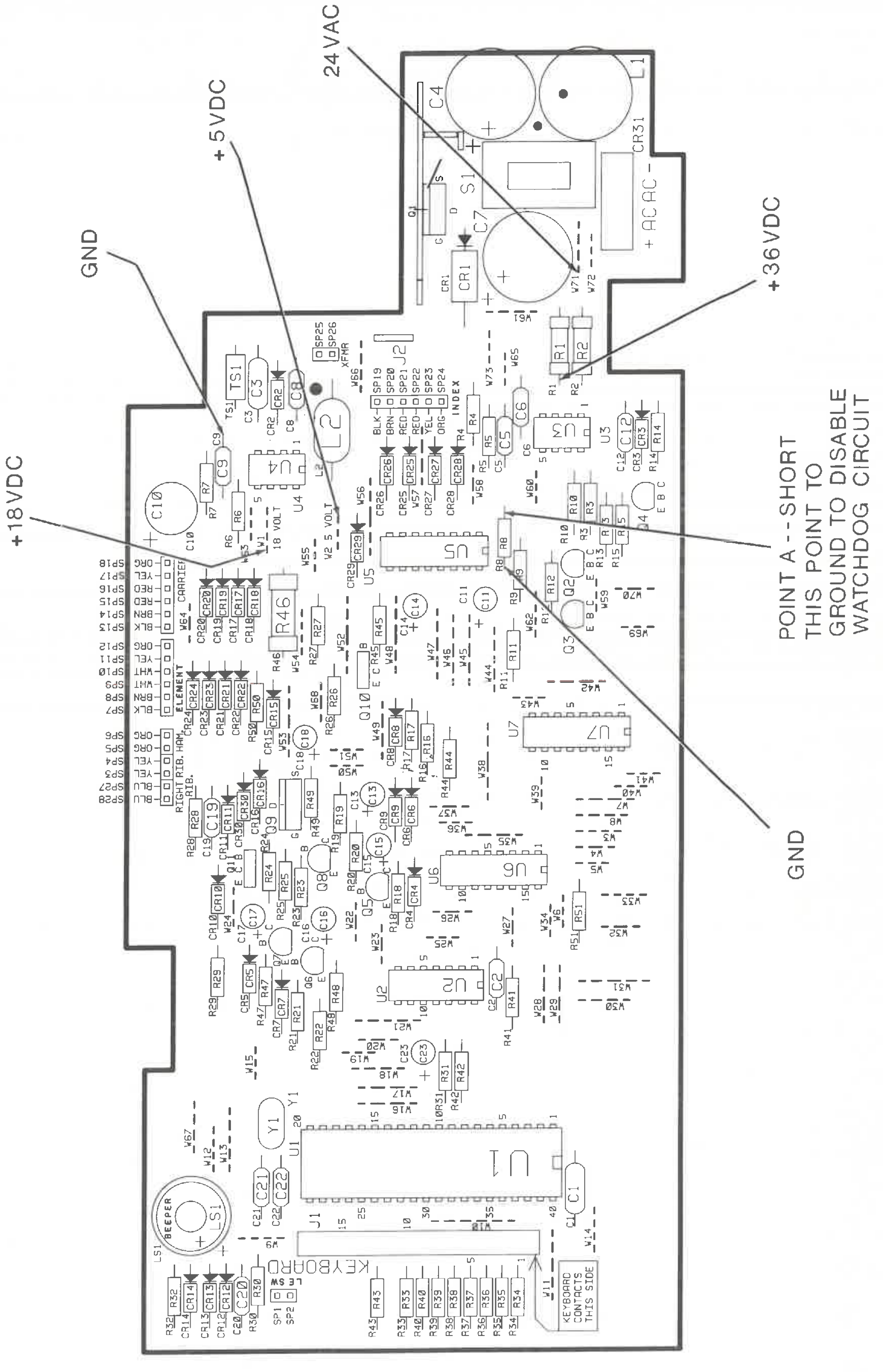

SECTION 8

DIAGRAMS

MODELS WITH DICTIONARY

		PAGE NUMBER
8A	KEYBOARD DIAGRAMS	
	Keyboard Layout Chart	7A-2
	Keyboard Matrix Diagram	7A-3
8B	WIRING DIAGRAM	7B-1
8C	WIRE ROUTING	
	Frames	7C-1
	Carrier	7C-2
8D	COMPONENT DIAGRAM	
	Control PC Board	8D-1
8E	SCHEMATIC DIAGRAM	8E-1

SCHEMATIC DIAGRAM

MODELS WITH DICTIONARY

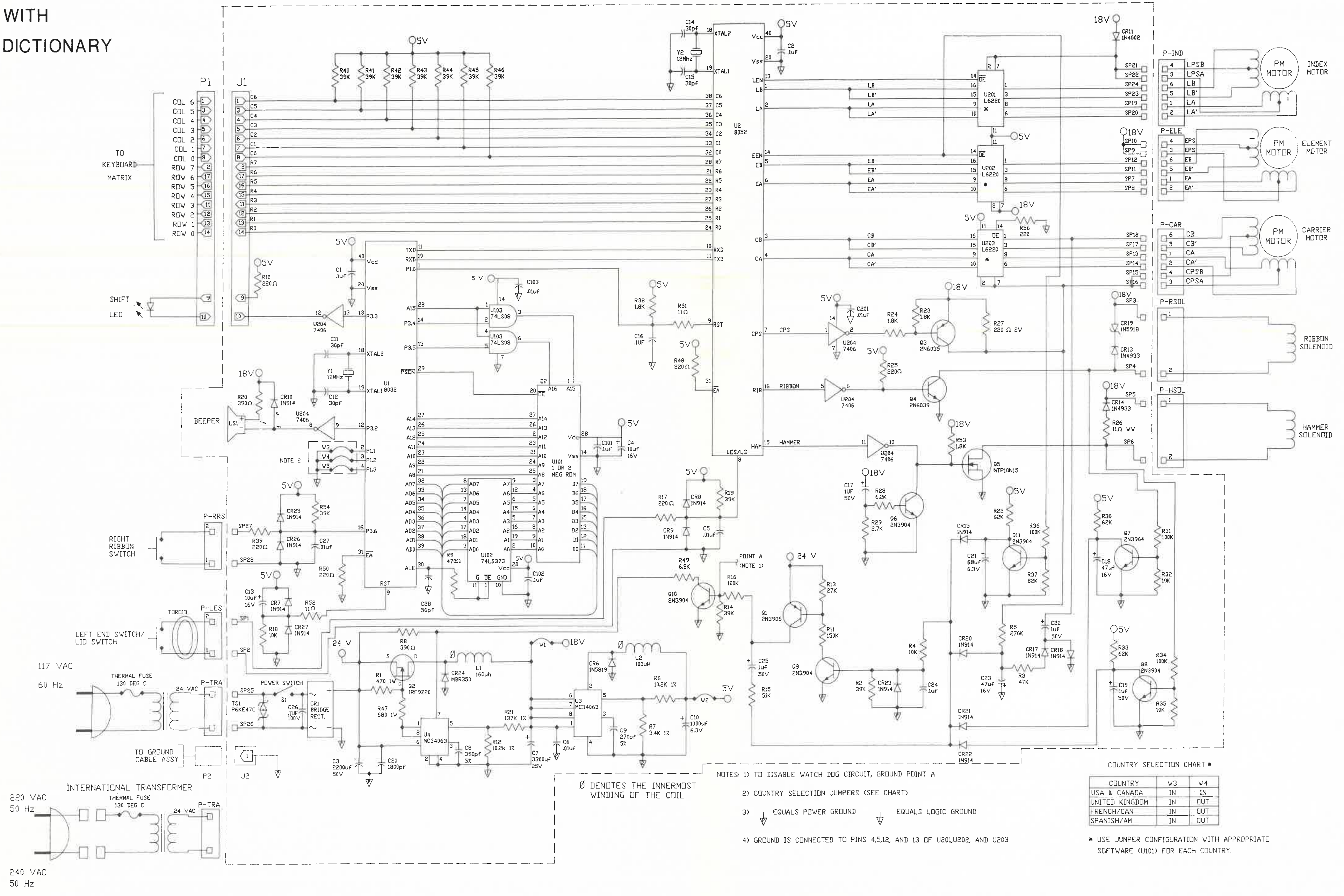

NOTES: 1) TO DISABLE WATCH DOG CIRCUIT, GROUND POINT A

2) COUNTRY SELECTION JUMPERS (SEE CHART)

3) EQUALS POWER GROUND EQUALS LOGIC GROUND

4) GROUND IS CONNECTED TO PINS 4,5,12, AND 13 OF U201,U202, AND U203

COUNTRY SELECTION CHART *

COUNTRY	W3	W4
USA & CANADA	IN	IN
UNITED KINGDOM	IN	OUT
FRENCH/CAN	IN	OUT
SPANISH/AM	IN	OUT

* USE JUMPER CONFIGURATION WITH APPROPRIATE SOFTWARE (U101) FOR EACH COUNTRY.

COMPONENT DIAGRAM

CONTROL PC BOARD

MODELS WITH DICTIONARY

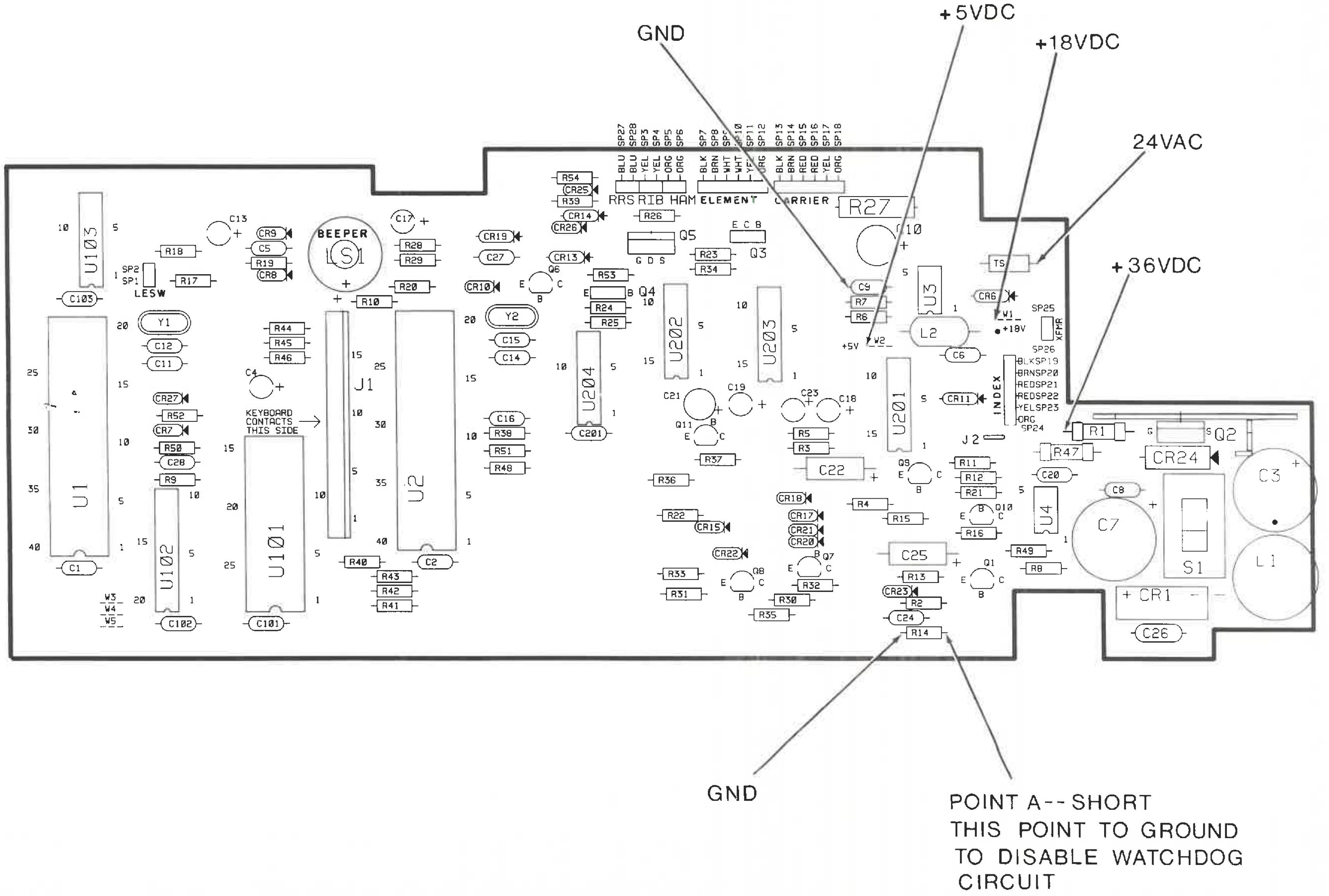

SMITH CORONA

FORM 3-0743 (4/8

SERVICE PARTS POLICIES AND PROCEDURES

PARTS ORDERS

Mail to or call: Smith Corona National Service Stores
150 McLean Road
P. O. Box 2070
Cortland, NY 13045
(607) 753-6011

TOLL FREE FAX: (800) 523-2881 (except New York State)

PROVISIONS

1. Use Parts Order Form No. 8031 (Attachment B). Must provide account number, name, address, part number, and quantity. You may indicate your order number and/or method of shipment. If no order number is specified, Smith Corona will assign one. Refer to it in any subsequent communications.

2. For phone orders, same information is required with no more than five (5) part numbers per phone order.

   Part numbers are essential. Refer to the current copy of General Information Bulletin No. 14 to order Parts and Service Manuals. Request Service Bulletins for families of models when completely updated parts information is required.

3. You may use your own order form, but all info in Provision No. 1 is required.

4. Minimum order: $20.00 List Price.

5. Dealers must have a current Smith Corona Account Number and be in good credit standing to order parts on account.

6. Customers may use Master Card, Visa, or American Express for parts purchases. Include account number, expiration date, name of card (Master, Visa, or American Express), and signature on the Parts Order. A $5.00 shipping and handling charge and applicable sales tax will be added.

   For purchases with check or money order, price out the parts using current Parts Price Lists and Price Change Notices. Add your local sales tax and $5.00 shipping and handling, and mail with check or money order. Otherwise, orders will be priced by Smith Corona, and returned to customer for payment prior to order processing. No C.O.D.

7. Smith Corona Dealers with account numbers receive 30% off List Price. There's no discount on Net priced items. There are no quantity discounts.

8. Invoices for PC Boards and other refurbishable parts are generated 30 days after shipment unless a matching parts return is received. Orders for other parts are invoiced upon shipment. Terms: Net 30 days.

9. Tools and service supply items are subject to sales tax. Residents of Louisiana and Hawaii must pay sales tax on entire shipment. Sales tax will be charged to other customers who do not have a Resale Certificate on file with Smith Corona.

10. Orders and backorders are filled on first in first out basis. All are shipped with 2 copies of Bill of Lading, Form No. 8030.

PARTS RETURNS

Smith Corona will replace parts that fail during the warranty upon receipt of the defective part.

Smith Corona will repair or exchange refurbishable parts (i.e. PC Boards) that are out of warranty upon receipt of the defective part, and will invoice the customer the repair/exchange net price published in current Price Lists.

Orders for PC Boards and other refurbishable parts are invoiced 30 days after shipment. When a matching parts return is received by Smith Corona within those 30 days, no invoice will be generated for warranty transactions. For non warranty transactions, Smith Corona will invoice the repair/exchange net price. Refurbishable parts returns received after 30 days from shipment will result in appropriate credits against invoices.

Non refurbishable parts are invoiced upon shipment, and credit will be issued when the defective warranty part is received by Service Stores.

PROVISIONS

1. A properly filled out Smith Corona Parts Return Form No. 8032 must accompany <u>all</u> parts returns. No exceptions. Procedures and policies related to parts returns are stated on the front and rear sides of that form, and constitute provisions regarding Parts Returns. See Attachment A.

2. The service parts system is capable of recognizing parts no longer eligible for warranty replacement because of length of time since last production. These include parts for products manufactured prior to 1980, and parts for models listed on Form "TEC-660" -- Ineligible Warranty Parts.

   Parts for models listed on "TEC-660" will be replaced only when a copy of the original retail Bill of Sale showing evidence of valid warranty is included with the Parts Return Form enclosed with the defective part.

   When a warranty claim is rejected on a non-refurbishable part, Smith Corona will not return the defective part. For refurbishable parts (i.e. PC Boards) Smith Corona will repair or replace the part, and invoice the repair/exchange net price.

   Keyboards, Keyboard PC Boards, Carrier PC Boards, and Platens are not considered refurbishable parts.

3. Parts purchased from Service Stores are warranted for 90 days from date of shipment.

4. When a returned PC Board is missing a major sub assembly such as a Spell Right Board or ROM Board, Smith Corona will invoice the missing piece.

5. For warranty shipments, Smith Corona will pay normal freight back to customer. Special freight (i.e. overnight) requested by the customer will be invoiced.

ATTACHMENT A

PARTS RETURN FORM

SMITH CORONA™

NATIONAL SERVICE STORES
150 McLEAN ROAD
P.O. BOX 2070
CORTLAND, NEW YORK 13045-0972

This box must be filled out completely
Account No. ____________________
Date ____________________

Order No. (Optional) ____________________
Ship Method (Optional) ____________________

Name and Address (PLEASE TYPE OR PRINT)

IMPORTANT DIRECTIONS ARE ON THE REVERSE SIDE OF THIS FORM

TYPE OF RETURN
(only one type of return per form)

CHECK ONE:

- ☐ A. Return for Warranty Replacement — (Complete columns 1, 2, 3, & 4.)
- ☐ B. Warranty Return for Credit — (Used when replacement part was ordered by phone. Complete columns 1, 2, 3, & 4. Include yellow copy of invoice *or* original Bill of Lading.)
- ☐ C. Return for Repair Exchange (Non Warranty) — (Applies to refurbishable items only: i.e., PC Boards. Complete columns 1 & 2.)
- ☐ D. Return for Repair Exchange Credit (Non Warranty) — (Used for non warranty refurbishable items when the replacement part was ordered by phone. Complete columns 1 & 2. Include yellow copy of invoice *or* original Bill of Lading.)
- ☐ E. Return of Parts Received from Service Stores for ☐ Credit or ☐ Replacement — (Used for returning parts that were received from Service Stores—i.e., defective or wrong parts, duplicate shipment, etc. Complete column 1 and include yellow copy of invoice *or* original Bill of Lading.)

				SERVICE STORES USE ONLY		
1	2	3	4	5	6	7
Part Number	Date of Service	Date of Retail Purchase	Machine Model and Serial Number	Date Rec'd	Rec'd By	Corrected Part Number

____
Manager's Signature

SERVICE STORES USE ONLY

☐ Entire Shipment returned to dealer
Reason ____________ (see back)

Return Shipping and Handling Charge
____
($5.00 minimum)

Warranty Claim Rejected on Following Parts.	
Part No.	Reason (See Back)

Form 8032 (3/88)

WHITE COPY TO SERVICE STORES — CUSTOMER RETAINS YELLOW COPY

SMITH CORONA™

NATIONAL SERVICE STORES
150 McLEAN ROAD
P.O BOX 2070
CORTLAND, NEW YORK 13045-0972

PARTS RETURN FORM

DIRECTIONS

1. All parts returns must be accompanied by a completely filled out Parts Return Form (#8032).
2. No more than 8 parts can be returned with one form. Each individual part must be listed separately and all information must be provided for each part. Use additional forms if necessary.
3. Only one *type* of return per form. Use additional forms if necessary.
4. On Returns for Credit (Return Types B, D & E), the yellow copy of the invoice *or* the original Bill of Lading must accompany this form. No exceptions.
5. A copy of the original retail Bill of Sale must be included for warranty claims on parts no longer eligible for warranty replacement because of length of time since last production, see TEC-660.
6. Parts must be returned within 30 days from date of service.
7. Completed PC Board Tag (TEC-622) must be attached to returned PC Boards.
8. Failure to provide all required information will result in return of parts, and a billing for shipping costs.

REASONS FOR REJECTION OF RETURN CLAIM

Incomplete Information

1. No Parts Return Form (#8032) included with return
2. Type of Return not indicated
3. Date of Service not included
4. Date of Retail Purchase not indicated
5. Model and Serial Number not indicated

Other

6. Refurbishable part damaged beyond repair
7. Missing pc board components
8. Part not considered a refurbishable part and not eligible for repair exchange
9. Date of service and date of retail purchase indicate part is out of warranty
10. Part Number not applicable to model listed (Column 4)
11. Part listed on form was not included in package: Part Number ______________________
12. Yellow copy of invoice or original Bill of Lading is required
13. Copy of the original Bill of Sale must be included for parts not eligible for warranty because of length of time since last production (see TEC-660)
14. Other ____

____

____

ATTACHMENT B
PARTS ORDER FORM

SMITH CORONA™

NATIONAL SERVICE STORES
150 McLEAN ROAD
P.O. BOX 2070
CORTLAND, NEW YORK 13045-0972

This box must be filled out completely Account No. ____ Date ____	Order No. (Optional) ____ Ship Via (Optional) ____
SHIP TO: (PLEASE TYPE OR PRINT)	SOLD TO: (same as SHIP TO unless shown)

MINIMUM ORDER $20 LIST PRICE

PART NUMBER	QUANTITY ORDERED	PART NAME	FOR S.S. USE	UNIT PRICE	FOR S.S. USE AMOUNT
				PARTS TOTAL	
				DISCOUNT	
				SUB. TOTAL	
				TAX	
				SHIPPING CHARGE	
				TOTAL CHARGE	

AUTHORIZED SIGNATURE

☐ Check or Money Order Enclosed
☐ Charge to:
☐ Master Card ☐ American Express
☐ Visa

Card No. ____ Exp. Date ____

Form 8031 (4-88)

WHITE COPY TO SERVICE STORES — CUSTOMER RETAINS YELLOW COPY

SMITH CORONA

SERVICE BULLETI

TO: Technical Service & Training
Regional Service Managers
Service Locations
Canada & International
Electronic Servicing Dealers

NO: 24

PRODUCT: 5A SERIES ELECTRONIC TYPEWRITERS

SUBJECT: 5A SERIES CONTROL PC BOARD TROUBLESHOOTING GUIDE

DATE: June 27, 1988

The following Troubleshooting Guide provides information on making simple repairs on 5A Series Control PC Boards for Non-Dictionary Models including XL 1000 (5AEA), SL 80 (5ACA), Mark V (5AWA), CXL 4000 (5APA), & Deville 80 (5AKA).

Model Group I:	Version I, P/N 770400 Circuit Board
Model Group II:	Version II, P/N 770400 Circuit Board; P/N 770414 Circuit Board
Model Group III:	P/N 771525 Circuit Board, Front Lid Switch, Type "B" Keyboard; P/N 771535 Circuit Board, Rear Lid Switch, Type "B" Keyboard

Component Diagrams are included at the end of the Guide.

This Guide is based on actual Board repairs made by the Electronics Repair Depot, and accounts for a majority of (but not all) Board failures.

BOARDS RETURNED FOR WARRANTY OR REPAIR EXCHANGE

If, after using this procedure Control PC Board still does not work properly, fill out and attach PC Board Return Tag (TEC-622) to the Board. Fill out a Parts Return Form according to directions, and return the Board to Smith Corona National Service Stores for warranty or repair exchange.

IMPORTANT: SMITH CORONA DOES NOT REPLACE OR EXCHANGE DAMAGED PC BOARDS.

Boards will be returned as irreparable and no credits or exchanges will be issued when

- There are missing components
- There are damaged or lifted off traces
- There are solder burns
- There is any other Board damage which makes the Board irreparable

OBSERVE STATIC PRECAUTIONS

GENERAL PROCEDURE

-- Use the Troubleshooting Procedures in section 6 of the 5A Series Service Manual (Form 3-0713) to isolate a problem to the Control PC Board.

-- Refer to the Component Diagram in this Bulletin for the Board being worked on.

-- Find the Symptom that the machine was experiencing, and make the first component check or change as indicated in the Check/Change List.

-- If the Component checks out okay, or if the Component is changed and the Board has the same problem, check or change the next component in the Check/Change List.

-- If, after checking or changing all Components in the Check/Change List the machine still exhibits the problem, return the PC Board for repair.

- OVER -

DC VOLTAGE & RESISTANCE CHECKS

Refer to pages 6-8 and 6-9 of the 5A Series Service Manual for general procedures for checking DC Voltages & Resistance. <u>NOTE:</u> When making voltage checks, touch the meter probes to Ground and to the Check Point with the power <u>Off:</u> Turn power on, check voltage reading, and turn power off again.

DIODE CHECKS

All Diode Checks must be made with Power <u>Off</u> and all Connectors unplugged. Set the Meter to Diode Check (2K Ohms Range if Meter does not specify Diode Check). Touch the Negative Probe of the Meter to the Cathode, and touch the Positive Probe to the Anode (a good Diode should read approximately 500-1000). Reverse the probes, and the reading should be infinite resistance.

<u>NOTE:</u> Not all Meters give the same readings on Diodes. Use the Meter to check a known good Diode to know what approximate readings should be.

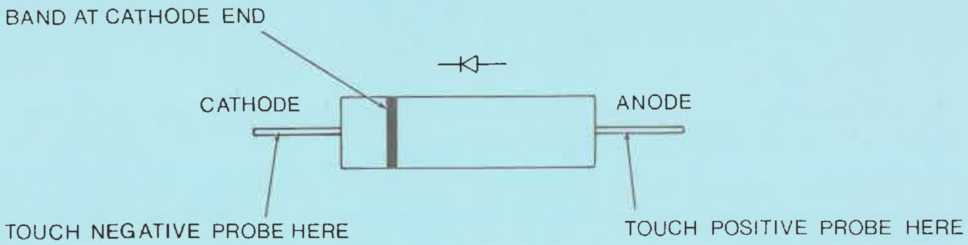

TRANSISTOR CHECKS

All Transistor Checks must be made with Power <u>Off</u> and all DC Power Supply Board Connectors unplugged. Set the Meter to Diode Check (2K Ohms Range if Meter does not specify Diode Check). Check the Component Listing to determine if the Transistor being checked is PNP or NPN. Then check the appropriate Component Diagram for the location of the Base, Collector, and Emitter Leads, and use the appropriate procedure below to take a reading. A good Transistor should read approximately 500-1000 when checked using the appropriate procedure, and the reading should be infinite resistance when the probes are reversed.

<u>NOTE:</u> Readings may vary when a Transistor is checked in the circuit on a PC Board. Check the same Transistor on a known good PC Board to know what the approximate readings should be.

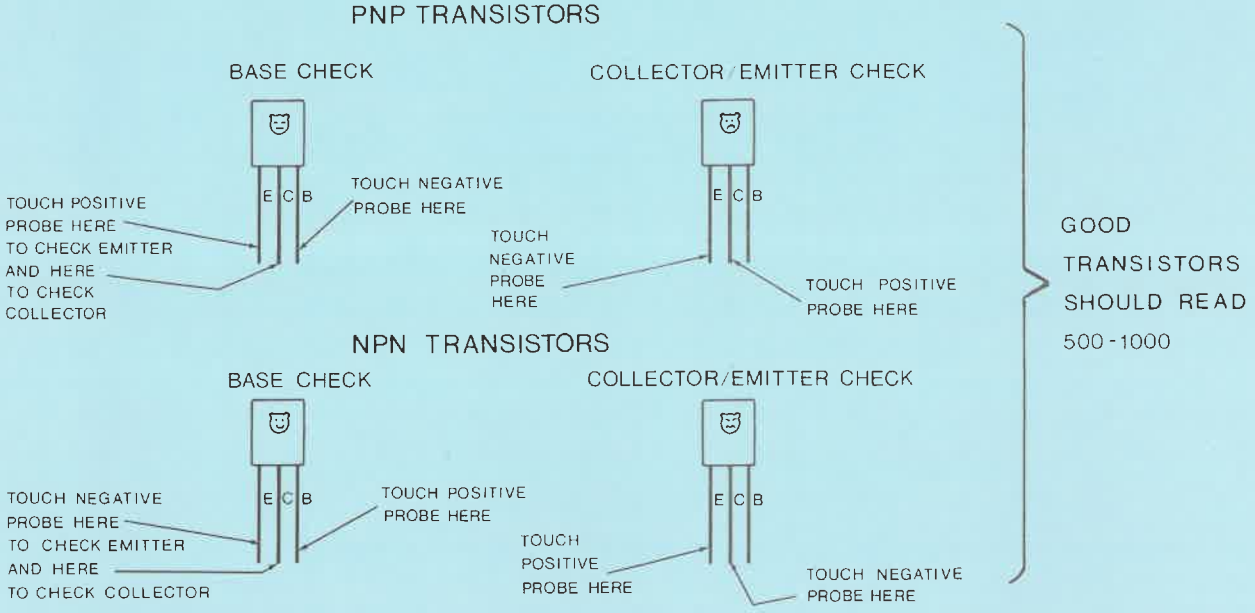

QUAD DRIVER CHECKS

All Quad Driver Checks must be made with Power Off and all Connectors unplugged from the Board. Set the Meter to Diode Check (2K Ohms Range if Meter does not specify Diod Check). Touch the Positive Probe to any Ground Pin (Pin 4, 5, 12, or 13). To check the Output, touch the Negative Probe to an Output Pin (Pin 1, 3, 6, or 8). Readings should be a minimum of 2000. To check the Input, touch the Negative Probe to an Input Pin (Pin 9, 10, 15, or 16). Readings should be approximately 500-1000.
NOTE: Not all Meters give the same readings on Quad Drivers. Use the Meter to check a known good Quad Driver to know what approximate readings should be.

TOUCH POSITIVE PROBE TO ANY GROUND PIN : TOUCH NEGATIVE PROBE TO INPUT OR OUTPUT PIN

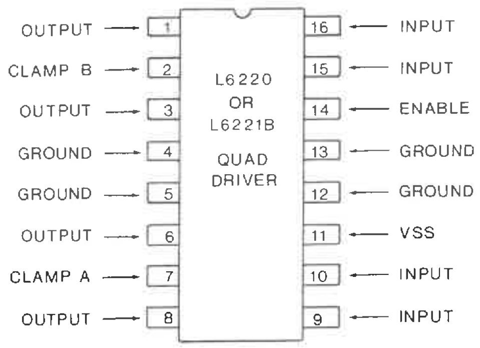

INPUT	OUTPUT
9	8
10	6
15	3
16	1

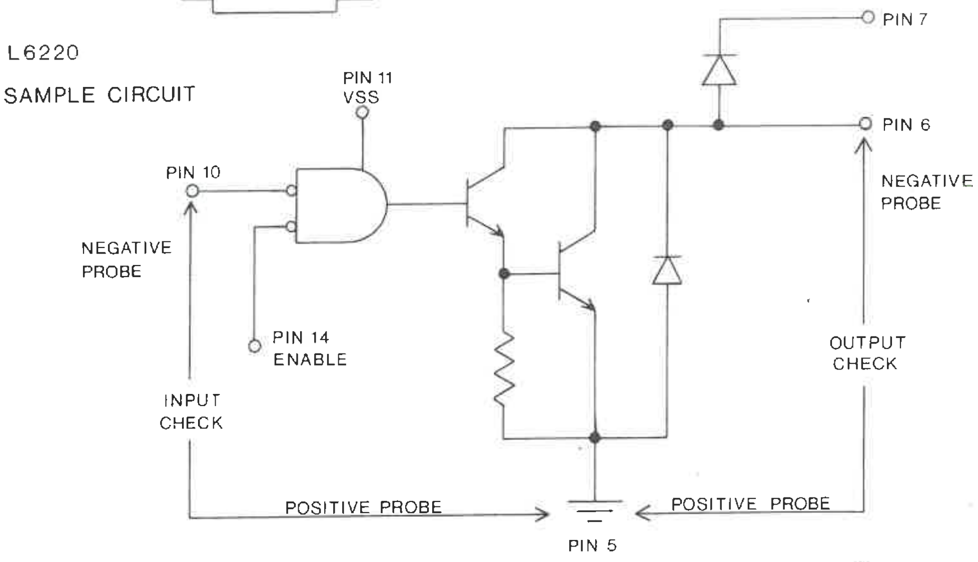

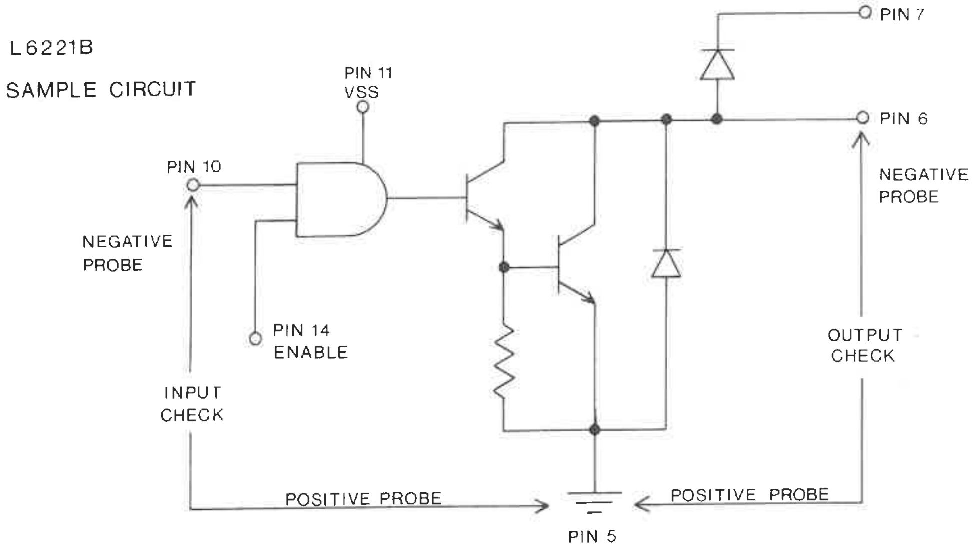

On 5A typewriters, the symptom "machine totally dead--no power" can be caused by transformer failure. Check the power circuit as described on page 6-5 of the Service Manual (3-0713). If the primary winding of the Transformer is open, replacement of the Transformer Assembly (P/N 770821) is required.

NOTE: Prior to replacing the Transformer, check the Bridge Rectifier on the Control PC Board for shorts because a shorted Rectifier may have caused the Thermal Fuse in the Transformer to blow.

Therefore, to prevent damaging a second Transformer and a potential repeat call, observe the following procedure whenever you repair a machine with an open primary winding in the Transformer.

1. Before powering up the machine, remove the PC Board, and check the Bridge Rectifier for shorts as described in this Bulletin. If the Rectifier is shorted, replace the PC Board or the Rectifier. Since PC Boards have been produced with two different types of Rectifiers, check which type is required:

   A) Bridge Rectifier (P/N 770853) has lead spacing of approximately 5/32" and is used on a PC Board with glue around it and components L1, S1, and C4.

   B) Bridge Rectifier (P/N 734802) has lead spacing of approximately 7/32" and is used on PC Boards with eyelets for components L1, S1, and C4 and no glue.

2. Before connecting the new Transformer to the PC Board, check the 24VAC output to verify correct function of the new part.

3. After powering up the machine, check the 36VDC output of the Rectifier at the point specified on page 7D-1 of the Service Manual. If it is not correct, replace the PC Board.

HOW TO CHECK THE BRIDGE RECTIFIER ON 5A SERIES ELECTRONIC TYPEWRITERS

1. REMOVE THE CONTROL PC BOARD FROM THE CASING BASE.
2. SET YOUR VOLT-OHMMETER FOR RESISTANCE AND CHOOSE A SCALE THAT READS 2000 OHMS OR LESS.
3. USE THE CHART BELOW TO DETERMINE IF THE SUSPECT BRIDGE RECTIFIER IS ACCEPTABLE BY CHECKING THE APPROPRIATE RECTIFIER LEADS.

BRIDGE RECTIFIER

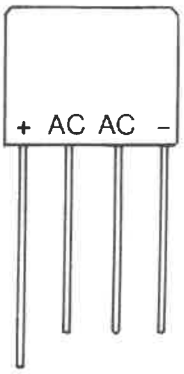

SCHEMATIC

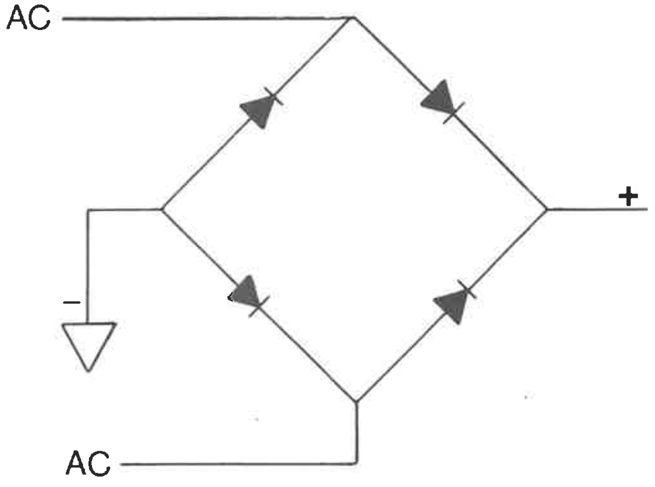

PLACEMENT OF ONE METER LEAD	PLACEMENT OF OTHER METER LEAD AND READINGS ON A GOOD BRIDGE RECTIFIER			
	+	AC	AC	-
BLACK METER LEAD ON + TERMINAL	X	710Ω	730Ω	1610Ω
RED METER LEAD ON + TERMINAL	X	∞	∞	∞
BLACK METER LEAD ON - TERMINAL	∞	∞	∞	X
RED METER LEAD ON - TERMINAL	1600Ω	700Ω	710Ω	X

NOTES:

1. TEST PERFORMED WITH BRIDGE RECTIFIER MOUNTED IN THE CONTROL PC BOARD. READINGS ARE NORMALLY LOWER IF RECTIFIER IS OUT OF CIRCUIT.
2. VALUES LISTED ARE APPROXIMATE USING A DIGITAL VOLT-OHMMETER.
3. CHART APPLIES TO VOLT-OHMMETER'S WITH NEGATIVE LEAD OF INTERNAL BATTERY CONNECTED TO BLACK METER LEAD. IF NOT, OPPOSITE READINGS WILL RESULT.
4. IF NOT ACCEPTABLE, REPLACE THE BRIDGE RECTIFIER WITH A NEW ONE. USE PROPER SOLDERING TECHNIQUES TO INSURE GOOD CONNECTIONS.

CONTROL PC BOARD TROUBLESHOOTING PROCEDURES

Refer to Schematic Diagrams provided with this Bulletin:

Group I: Page 7 & 10
Group II: Page 8 & 11
Group III: Page 9 & 12

A) SYMPTOM: INOPERATIVE, NO TRANSFORMER OUTPUT (24 VAC). CHECK CR5 BRIDGE RECTIFIER FOR SHORTS BEFORE REPLACING TRANSFORMER.

CAUTION: A SHORTED BRIDGE RECTIFIER WILL BURN OUT A NEW TRANSFORMER.

CHECK/CHANGE:
GROUP I: CR5, 5/32" LEAD SPACING, BRIDGE RECTIFIER (P/N 770853)
CR5, 7/32" LEAD SPACING, BRIDGE RECTIFIER (P/N 734802)
GROUP II & III: CR5, 7/32" LEAD SPACING, BRIDGE RECTIFIER (P/N 734802)

B) SYMPTOM: INOPERATIVE, NO 18 VOLTS DC (DISABLE WATCHDOG CIRCUIT PER PAGE 6-4 OF SERVICE MANUAL AND OBSERVE HAMMER AND RIBBON SOLENOIDS CAREFULLY. IF ANY MOVEMENT OCCURS, IMMEDIATELY TURN POWER OFF TO PREVENT DAMAGING SOLENOIDS).

CHECK/CHANGE: S1, SWITCH, (P/N 770822)
VR1, STR2012 REGULATOR (P/N 771722)
GROUP I & II: L1, 2 PIN, 270 uH, (P/N 770310) * RESOLDER IF LOOSE ON BOARD
GROUP III: L1, 4 PIN, 270 uH, (P/N 781560) * RESOLDER IF LOOSE ON BOARD

CONTROL PC BOARD TROUBLESHOOTING PROCEDURES (continued)

C) SYMPTOM: INOPERATIVE, NO 5 VOLTS DC (18 VOLTS DC OKAY)

CHECK/CHANGE: U6, LM3578 (P/N 770300)
L2, 330 uH (P/N 770309) * RESOLDER IF LOOSE ON BOARD
CR4, 1N5819 (P/N 760421)

D) SYMPTOM: KEYBOARD FAILS TO RESPOND

CHECK/CHANGE: KEYBOARD CONNECTION TO CONTROL BOARD CONNECTOR * REPLACE CONNECTOR (P/N 770150)

E) SYMPTOM: WEAK HAMMER IMPRESSION

CHECK/CHANGE: C4, 2200 UF/35 VDC (P/N 770215) * RESOLDER IF LOOSE ON BOARD

F) SYMPTOM: HAMMER SOLENOID CONTINUALLY ENERGIZED (SHORTED) OR DOES NOT FIRE (OPEN)

CHECK/CHANGE: Q2, 2N6045 (P/N 770302)
Q5, 2N3904 (P/N 702518)
CR2, 1N4933 (P/N 722058)
R2, 11 OHMS ±5% (P/N 781720)

G) SYMPTOM: RIBBON SOLENOID CONTINUALLY ENERGIZED (SHORTED) OR DOES NOT FIRE (OPEN)

CHECK/CHANGE: Q1, 2N6039 (P/N 743086)
CR6, 1N4933 (P/N 722058)

H) SYMPTOM: RIBBON FEEDS, BUT CORRECTION RIBBON WILL NOT LIFT

REPLACE: Q1, 2N6039 (P/N 743086)

I) SYMPTOM: CARRIER MOTOR VIBRATES OR DOES NOT WORK PROPERLY

CHECK/CHANGE: U2, L6221 (P/N 770307)
Q4, 2N6035 (P/N 740344)
CR7, 1N4001 (P/N 700521)

J) SYMPTOM: ELEMENT MOTOR VIBRATES OR DOES NOT WORK PROPERLY

CHECK/CHANGE: U3, L6221 (P/N 770307)

K) SYMPTOM: INDEX MOTOR VIBRATES OR DOES NOT WORK PROPERLY

CHECK/CHANGE: U4, L6221 (P/N 770307)
CR1, 1N4001 (P/N 700521)

For prices refer to the current Smith Corona Parts Price List.

Smith Corona reserves the right to discontinue parts at any time and/or to furnish substitutes.

COMPONENT DIAGRAM

CONTROL PC BOARD

5AEA/5ACA

VERSION 1

FRONT LID SWITCH

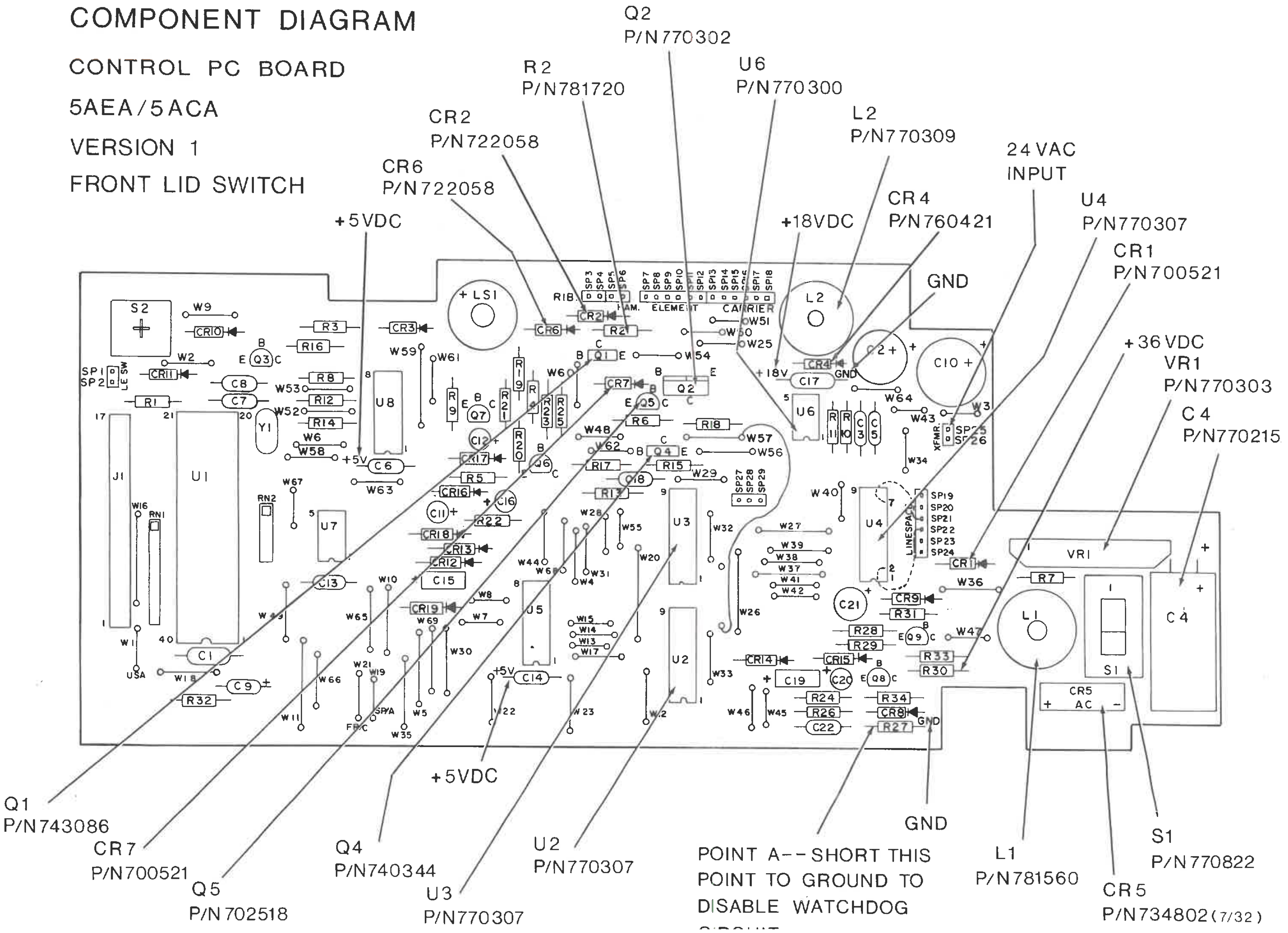

COMPONENT DIAGRAM

CONTROL PC BOARD

5AEA/5ACA

VERSION 2

FRONT LID SWITCH

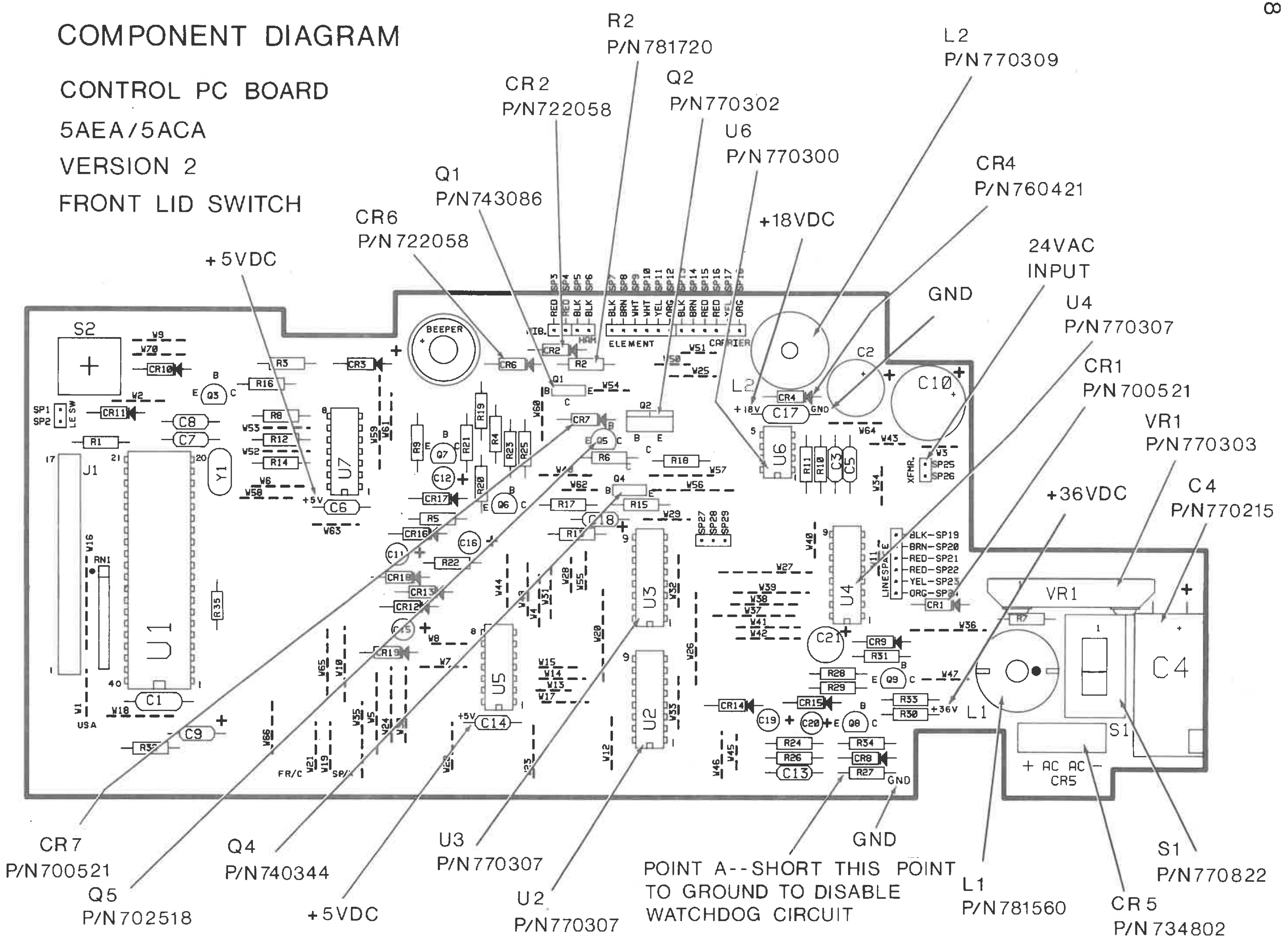

COMPONENT DIAGRAM

CONTROL PC BOARD
5AEA/5ACA
TYPE B KEYBOARD
REAR LID SWITCH

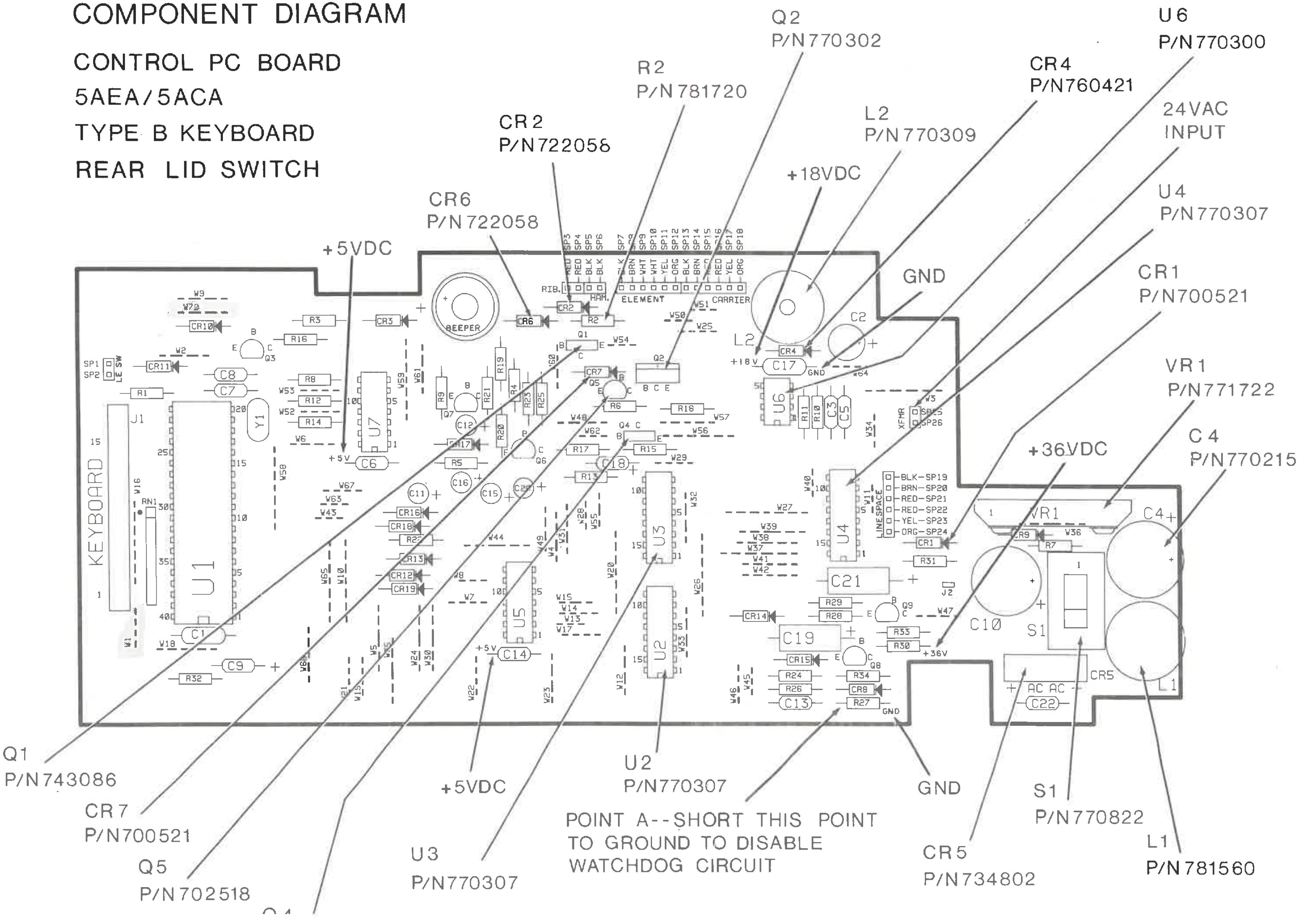

SCHEMATIC DIAGRAM
5AEA/5ACA
VERSION 1
FRONT LID SWITCH

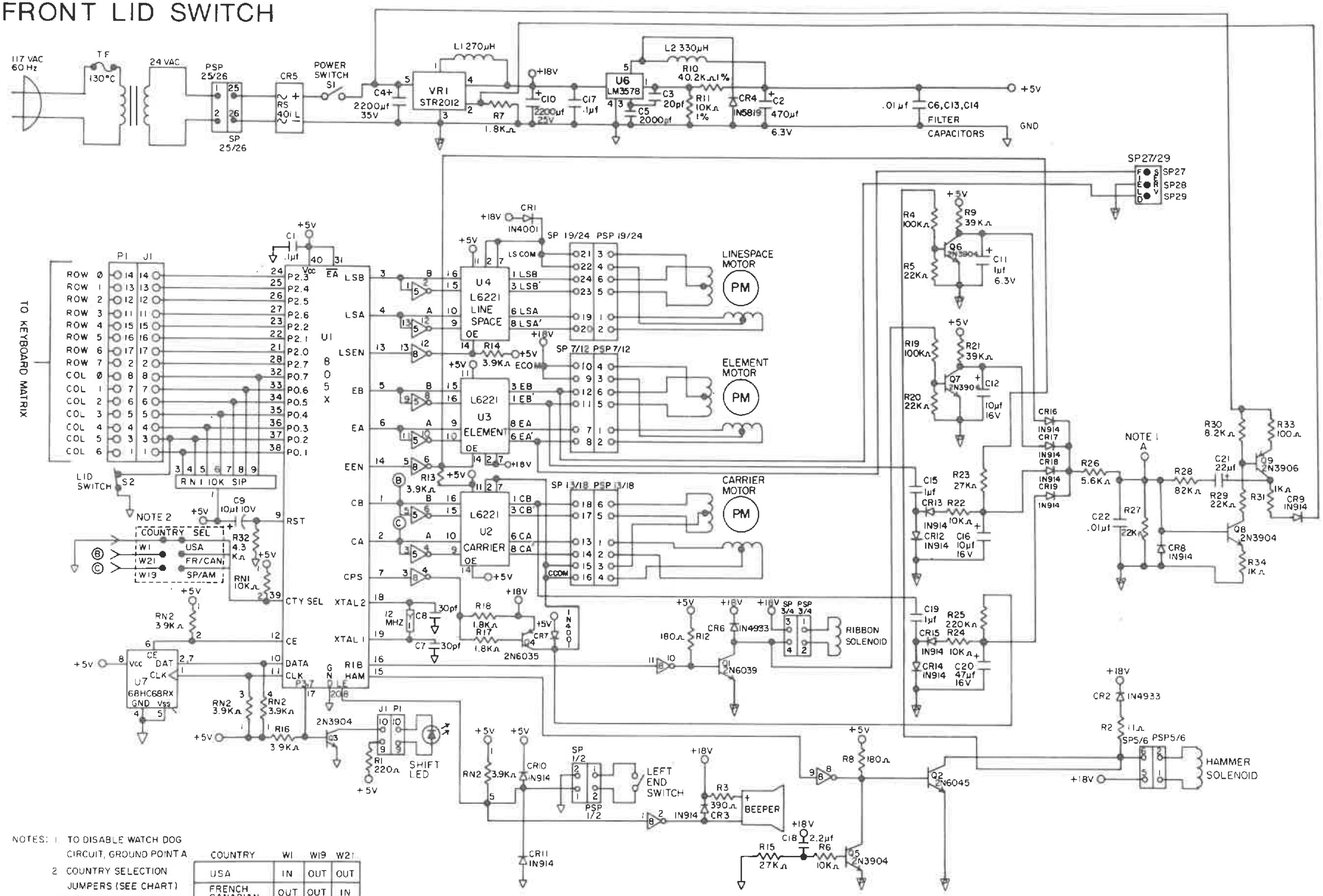

NOTES: 1 TO DISABLE WATCH DOG CIRCUIT, GROUND POINT A
2 COUNTRY SELECTION JUMPERS (SEE CHART)
3 ▽ = POWER GROUND
▽ = LOGIC GROUND

COUNTRY	W1	W19	W21
USA	IN	OUT	OUT
FRENCH CANADIAN	OUT	OUT	IN
SPANISH AMERICAN	OUT	IN	OUT

SCHEMATIC DIAGRAM

5AEA / 5ACA

VERSION 2

FRONT LID SWITCH

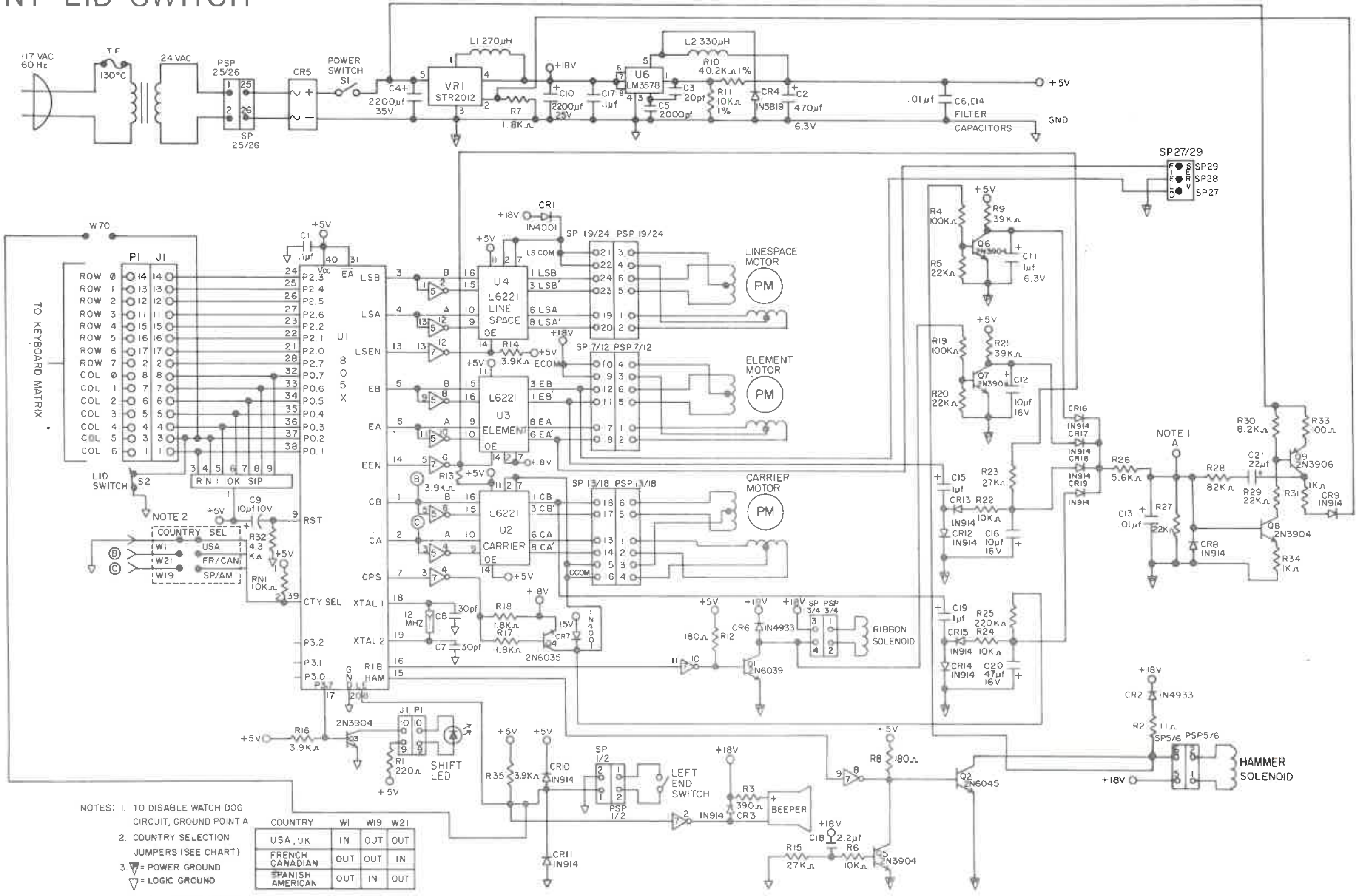

NOTES:
1. TO DISABLE WATCH DOG CIRCUIT, GROUND POINT A
2. COUNTRY SELECTION JUMPERS (SEE CHART)
3. ▽ = POWER GROUND; ▽ = LOGIC GROUND
4. GROUND IS CONNECTED TO PINS 4, 5, 12, AND 13 OF U2, U3, AND U4
5. U5-74LS04, U7-7406

COUNTRY	W1	W19	W21
USA, UK	IN	OUT	OUT
FRENCH CANADIAN	OUT	OUT	IN
SPANISH AMERICAN	OUT	IN	OUT

5AEA/5 ACA
TYPE B KEYBOARD
FRONT OR REAR LID SWITCH

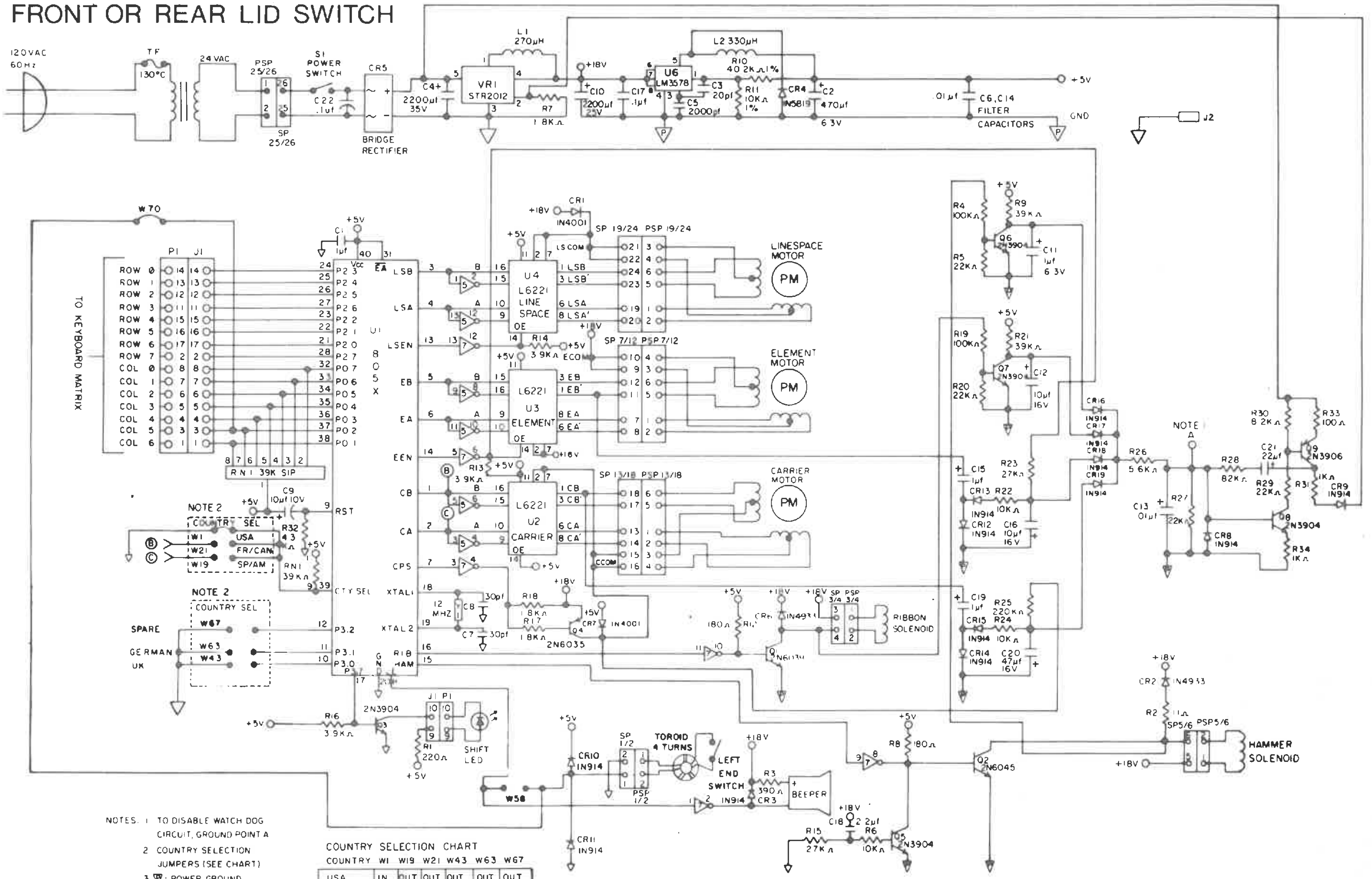

NOTES.
1. TO DISABLE WATCH DOG CIRCUIT, GROUND POINT A
2. COUNTRY SELECTION JUMPERS (SEE CHART)
3. ▽ : POWER GROUND
   ▽ : LOGIC GROUND
4. GROUND IS CONNECTED TO PINS 4, 5, 12 AND 13 OF U2, U3 AND U4
5. U5 - 74LS04
   U7 - 7406

COUNTRY SELECTION CHART

COUNTRY	W1	W19	W21	W43	W63	W67
USA	IN	OUT	OUT	OUT	OUT	OUT
FRENCH CANADIAN	OUT	OUT	IN	OUT	OUT	OUT
SPANISH AMERICAN	OUT	IN	OUT	OUT	OUT	OUT
UNITED KINGDOM	OUT	OUT	OUT	IN	OUT	OUT
GERMAN	OUT	OUT	OUT	OUT	IN	OUT